Check for updates

ESSAY

Matter, process, and sound: A hybrid practice across art and science

[version 1; peer review: 3 approved with reservations]

DIMITRA KOUSTERIDOU

Media Arts and Design Research Lab, Cyprus University of Technology, Cyprus Research Centre, Nicosia, Nicosia, Cyprus

v1 **First published:** 16 Apr 2026, **6**:113
https://doi.org/10.12688/openreseurope.21476.1
Latest published: 16 Apr 2026, **6**:113
https://doi.org/10.12688/openreseurope.21476.1

Abstract

Listening to the Becoming of Matter

" The materiality of sound is not a thing, but an event."

— Salomé Voegelin

" Sound is not the object but the event of its possibility."

— Salomé Voegelin, Sonic Possible Worlds

"Matter, Process, and Sound: A Hybrid Practice Across Art and Science" explores an artistic research practice where materials are treated not as passive substances but as active sonic organisms. Drawing on Salomé Voegelin's sonic materialism, Organism-Oriented Ontology (Hustak & Myers), and theories of assemblage (Deleuze & Guattari; Anderson & McFarlane), this study investigates how clay, graphite, conductive matter and sound circuits can be wired into dynamic systems that both perform and reveal the processes of transformation. Through handbuilt electronics and sculptural experimentation, the work listens to matter as it dries, cracks, resists, and conducts, translating these material negotiations into rhythms, pulses, and frequencies.

This article situates this practice at the intersection of visual art, sound art, and scientific inquiry, reflecting on the temporality and instability of substances as a form of composition. Matter is understood not as an inert medium, but as a participant in sympoietic assemblages — entangled ecologies of human and nonhuman, organic and inorganic, technical, and atmospheric. In this way, the studio has become a hybrid site of chemistry, alchemy, and sonic experimentation, where listening is a method of attending to the becoming of materials.

Open Peer Review

Approval Status ? ? ?

	1	2	3
version 1 16 Apr 2026	? view	? view	? view

1. **Molly Mullen**, The University of Auckland, Auckland, New Zealand
2. **Yurima Blanco García**, Universidad de Valladolid, Palencia, Spain
3. **Ana Luísa Veloso**, University of Aveiro, Aveiro, Portugal
   Alfonso Benetti Junior, University of Aveiro, Aveiro, Portugal

Any reports and responses or comments on the article can be found at the end of the article.

The culmination of this research is presented in *Dielectrics*, a sound-visual installation and live performance created during a residency at DA LAB in Sofia. Here, conductive clays and handmade circuits generate evolving sonic environments shaped by humidity, touch, and time, inviting audiences into a collective act of listening. The work demonstrates how composition can function simultaneously as an experiment, ecology, and philosophy — a sonic materialism of practice where sound makes the agency and temporality of matter palpable.

Plain Language Summary

This project explores how materials such as clay, graphite, pigments, and salt are not only used to make artworks but can also “speak” through sound. Normally, when we think of painting or sculpture, we imagine materials being fixed into solid, permanent forms. But materials are never truly still : they dry, crack, absorb moisture, or react with their environment. In my practice, I connect these materials to simple electronic circuits that allow their changes to be heard as sound. For example, as clay dries, its resistance to electricity shifts, creating different tones and rhythms. In this way, the material itself becomes part of the music.

The work combines art, science, and philosophy. It treats matter not as passive or silent, but as active, responsive, and alive with its own rhythms. By listening to these processes, the project invites audiences to experience art as an unfolding relationship between humans, materials, and the environment. The installations and performances are less about finished objects and more about shared moments of attention and care, spaces where we learn to listen differently to the world around us.

Keywords

Sonic materialism, Posthuman aesthetics, Sympoietic practices, Organism-Oriented Ontology (OOO) , Vibratory ecologies, Artistic research, Hybrid art-science methodologies, Experimental composition, Transdisciplinary practice, Alchemical materiality

This article is included in the COST Actions gateway.

This article is included in the Toolkit of Care collection.

Corresponding author: DIMITRA KOUSTERIDOU (kousteridoudimitra@gmail.com)

Author roles: KOUSTERIDOU D: Resources

Competing interests: No competing interests were disclosed.

Grant information: This project has received funding from the European Union's Framework Programme for Research & Innovation as part of the COST Action [CA21102,Toolkit of Care], as supported by the COST Association (European Cooperation in Science and Technology).
The funders had no role in study design, data collection and analysis, decision to publish, or preparation of the manuscript.

Copyright: © 2026 KOUSTERIDOU D. This is an open access article distributed under the terms of the Creative Commons Attribution License, which permits unrestricted use, distribution, and reproduction in any medium, provided the original work is properly cited.

How to cite this article: KOUSTERIDOU D. **Matter, process, and sound: A hybrid practice across art and science [version 1; peer review: 3 approved with reservations]** Open Research Europe 2026, **6**:113 https://doi.org/10.12688/openreseurope.21476.1

First published: 16 Apr 2026, **6**:113 https://doi.org/10.12688/openreseurope.21476.1

Substances that refuse to set

In painting and sculpture, as in all plastic arts, there are embedded negotiations between combination and composition, between the merging and shaping of materials. Painting, for instance, often involves transforming something as fluid as water into something as solid and enduring as a stone. If we assume that artworks solidify into fixed forms over time, then the substances used to create them tend to reach a chemically stable, inert state in relation to their environment and to the other materials with which they are mixed. These materials begin as organic mediums, functioning first as carriers, and then, through environmental and temporal transformation, as binding agents (Brickler, 2013, p. 31). In the visual arts, matter shifts mainly in its distribution of water and stone: the fluid and the solid, the carrier, and the substance, through changes in the rheological (flow-related) properties of the mixture.

As a painter, I have experimented extensively with careful observation and combination of water with various visual materials such as: clays, crushed stones, pigments, and solid compounds. This always begins with meticulous blending.

Consequently, I approach musical composition in the same way that I approach the process of painting and working with matter. The creation of sonic work involves the softening and blending of rhythms and frequencies, textures, and intensities, -fused together in time to form patterns and structures. In my practice, the exploration of the sonic behaviours of matter makes my working environment an amalgamation of sound studio and lab, everything is a potential experiment. Physical engagement with painting and sculpture—processes that absorb the mind through smell, texture, and material—has alerted me to the significance of simply observing how matter transforms. As I witnessed mater dry, harden, or shift I began to wonder: could I also *listen to* this transformation?

Could I listen to tiny shifts in substance? The rhythms of matter itself?

Using hand-built electronic sound circuits, I connect them to conductive materials such as clay or graphite substances I have already sculpt and painted with. These materials offer me their rhythms through their conductivity and resistance. Visual objects become bridges and energy transmitters. They carry and shape an electric current that, when sonified, is in turn shaped by the material itself. The fusion of these materials with open audio circuits generates an evolving rhythms and signal ecosystem. Within this sonic-matter system, all the components act as both tools and interpreters of the process. The work is ongoing. Materials reveal their capacity to be vessels of energy, bearing electrical charges as they dry, stabilize, and transform over time.

Raw amalgams of conductive material, sculpturally and painterly, are translated into frequencies through the sounds they produce within electronic circuits. These frequencies manifest as pulses and rhythms that are influenced by their surroundings and mutual interactions. This creates a system in which visual and material elements are woven together through their acoustic regularities, emerging within and around one another, traversed by a shared energy, both metaphorically and literally.

In the studio, I begin again. I stir graphite into water. I dissolve clay. Not to mold, but to understand their resistance to current. The materials are not passive. They don't wait to be used. They shift, collapse, sediment, signal. The act of painting urged me to bind fluid into permanence. To take something as volatile as water and fix it into form. But form is never still. The painting dries, the material reacts. Crystals form. Pigment floats and settles into fissures invisible to the eye. What we think of as image is merely a snapshot of chemistry mid-conversation. Through these movements, audible through the electric circuit — the listening begins..."

To not only see, but also to hear the clay drying, and graphite flickering with voltage, the pigment hardens into tone.

Circuits that listen

I wire my materials into sound as I build open circuits, not to transmit data but to reveal becoming. The circuit is not a tool but a translator; a fragile body attentive to shifts cannot stabilize it. Once shaped, clay is laced with conductive traces; graphite lines open themselves as channels. Salt, copper, and iron, elements of the alchemical lineage, guide the current to an audible form. As the materials shift state, they alter the resistance and bend the signal. Moisture evaporates and the tone rises; a crystal forms, and pulse fractures. These are not errors or distortions but the voice of matter in the process. The circuit listens where the eye cannot: it renders the temporal instability of the substance as a rhythm.

This practice resonates with Salomé Voegelin's sonic materialism, where sound is not the representation of an object, but the manifestation of its condition over time. To listen through circuits is to hear not what matter "is" but how it becomes: its hesitation, its drift, its negotiation with air and humidity. In this sense, circuits have fewer instruments than interlocutors. They do not simply measure conductivity; they expose it as vibrations. The fluctuating pitch is the material's way of speaking, not as a metaphor but as frequency, resistance, and pulse. What emerges is not a score imposed from the outside, but a dialogue between materials, currents, and the atmosphere. Through this dialogue, the matter refuses silence. Clay is a waiting signal; it is a variable resistor, shifting its voice as it dries. The studio becomes a resonant ecology, where every element is simultaneously a conductor, resistor, and performer.

The visual as latent vibration

Matter has a tendency to resist, as the drying pigment still undergoes changes. Clay cracks occurred after the hand leaves it. Graphite absorbs air. These are processes, not states. I work in between: the wet moment, the unstable bond, and the chemical hesitation between the two forms. My interest lies in the ephemeral duration of matter, where art and science

fold together, where art becomes a system of observation, as much as an expression. By listening through the wires and surfaces. Conductive materials, such as: graphite powders, clay, metallic pastes, and minerals in water, are incorporated into visual compositions. These materials are part of open audio circuits. Their resistance shifts as they dry or interact with the atmosphere. The material then becomes a signal. It provides rhythm through what it is. Each crack in the clay changed its circuit. Each new mineral alters sonic feedback. The system responds to the drying time, ambient humidity, and chemical composition of the compound. The object becomes a feedback loop.

To describe this work technically is to miss the poetic density that it holds. What I seek is not just an analysis of frequencies but an invitation to attend to the world through matter and vibration. Clay hums: graphite flickers. It was not because they were programmed to, but because they were. This is because their materiality was their score. The materials reveal themselves only as they shift; they are never fully present and are never fully knowable. This instability is their truth. It resists visual fixation It favours listening. (Figure 1, Figure 2 and Figure 3)

Organism-oriented ontology, assemblages: the vibratory compositions

In dialogue with Voegelin, Hustak and Myers' *Organism-Oriented Ontology* offer another perspective: organisms are not isolated beings but attentive relations, processes of co-perception, and co-constitution. In my practice, materials behave like organisms. Clay responds to humidity, to my touch and to electricity. Graphite absorbs, resists, and cracks. Circuits adapt to these changes. Together, we form what Myers might call an ecology of noticing: a field in which each entity responds to the other's vibrations. The ontology shifts: clay is not a passive medium but a sonic organism; graphite is not an inert carbon, but a conductive agent. The work is not an object, but an assemblage of relations, a living ecology that composes itself. The sonic circuit with matter functions as the point of departure for what I call sympoietic compositions: ever-evolving assemblages of materials, energies, and participants. Assemblage, as Anderson and McFarlane (2011) define it, is a "temporary socio-spatial formation" made of heterogeneous elements: human and nonhuman, organic and inorganic, technical, and natural. They remain distinct yet are bound by temporary co-functioning. Müller (2015) reminds us that: an assemblage is a "way of arranging heterogeneous entities so that they work together, for a time."

In my composition, these assemblages are vibratory. They unfold as networks of relationships between performers, materials, instruments, and audiences. Each element retains its own emergent properties and is capable of autonomous shifting. A lump of clay drying in the circuit may fall out of sync with its earlier self, producing new resonances, resistances, and rhythms. Deleuze called this "adsorption", a coalition that holds together while preserving the active force of its parts. The energy of the assemblage comes not from unity but from the vitality of its heterogeneous materials. (Figure 4)

Instruments, actants, and agents

To frame this, I will turn to organology. Traditionally, instruments are viewed as tools, extensions of the body, and filters of human action. However, as Allen Roda (2007) suggests,

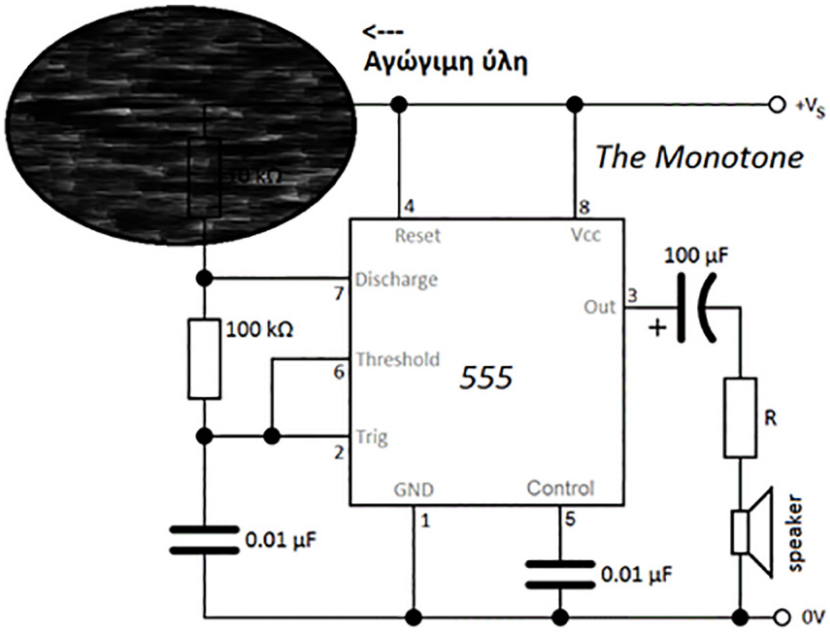

Figure 1. A semi-open 555 sound circuit. The conductive substance performs the dual roles of a resistor and a conductor. While changes in the moisture content of the material alter its resistance, it allows current to flow to complete the circuit and produce sound. These modifications create dynamic auditory patterns by introducing variations in the sound's frequency and rhythm.



Figure 2. Electric circuits as mechanisms for producing sound. A conductive substance (such as graphite) is used in place of a resistor, assuming the basic circuit is functioning. This material acts as a variable resistor, with its resistance varying according to its moisture content. Changes in the resulting sound can be seen by adjusting the values of the circuit's constituent parts.



Figure 3. During the COST residency at the Academy of Fine Arts in Sofia, working with clay, stone, and circuits. An ongoing audio-visual installation is created by the arrangement of several sound sculptures in space. Component value variations are used to investigate how circuit.

understanding instruments requires anthropological, material cultural, and phenomenological methods. In my practice, instruments are not neutral mediators, but actants (Latour, 2005):

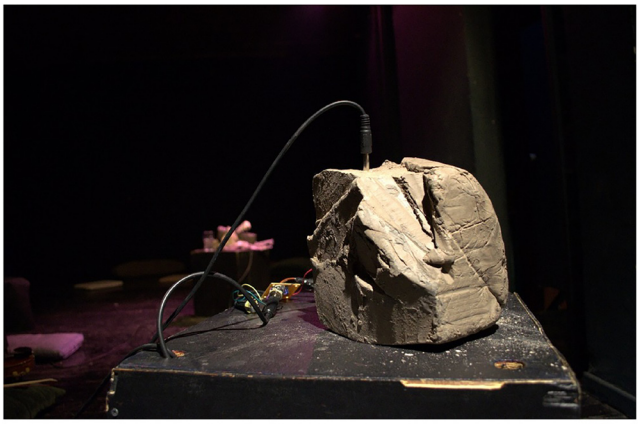

Figure 4. Illustration of clay combined with circuits and batteries, creating vibrational assemblages with other conductive materials. The combined material form an interaction system in which the clay acts as a both a structural and responsive component of the sound-generating system.

elements in a network that shift energies, relations, and outcomes. A clay circuit is as performer as a musician. A graphite trace is as much a composer as my own. Cimini (2010), reflecting on Deleuze and Spinoza, describes music-making as the emergence of a complex composite body: players, instruments, air, and sound particles coalesce into temporary wholes. In my sympoietic compositions, this composite body includes clay, pigment, wire, electricity, humidity, and listeners. The result is an expanded organology, where instruments are not bounded artifacts, but ecologies of relations.

Sympoietic compositions resist closure. They are not works to be finished but processes to be lived. Clay hardens, graphite flakes, circuits corrode, and decay sounds. Each transformation is part of the composition. Each element is an agent of change, that is, a node in a network of becoming. What emerges is not harmony but attunement: Listening to the multiplicity of relations that constitute matter. The artwork is a temporary ecology, an organismic assemblage, and a field of vibrations, which are not static individuals, but relational nodes in a meshwork of encounters. This resonates profoundly with my own practice. When I wire clay into a circuit, or saturate graphite with moisture and voltage, I am not building an object but entering into an organismic relationship. The material listens to as much as I do. Its conductivity changes in response to movement, touch, and humidity in a room. I respond in turn, altering my movement, circuitry, and ear. The artwork becomes less of a product than the ecology of noticing.

Sound makes this relationship palpable. Unlike vision, which tends to objectify, sound envelopes, traverses, and joins. The ontology here is not about separating the subject from the object, but acknowledges that each substance is already a performer of relations. Clay does not merely "exist" as inert soil; it *performs conductivity*, it *performs resistance*, it *performs*

memory of water. Graphite exhibits history, compression, and fragility. Their behaviors, when amplified into sound, are not metaphors, but audible acts of organismic presence.

In this sense, practice moves beyond object-oriented ontology, which often risks reducing things to inaccessible essences, and leans toward an organism-oriented ontology, where every entity is understood through its capacities for relation, affect, and change.

Matter, like an organism, is always more-than-itself.

It notices, resists, leaks, and cracks.

It acts, and, in acting, asks us to act with it.

. Each artwork is a rehearsal of multispecies, multi-material entanglement:

- clay with copper,

- graphite with skin,

- electricity with humidity,

- skin with matter.

These are relational organisms and, sonic assemblages whose vitality is not reducible to their parts. Like Labatut's scientists who blurred the line between hallucination and mathematics, I blur the line between sculpture and organism, and between circuit and ecology. The point is not to resolve these categories, but to live in the uncertainty they generate: a space where matter speaks not as a mute substance but as a living relationship.

What, then, is composition?

However, this is not a pure arrangement. It is a chance for matter to speak. The rhythm of evaporation. The voltage of drying minerals. The harmony of interference between circuits.

I listen to these as a composer.

I respond as a sculptor.

I document as a researcher.

I surrender as an alchemist.

Clay is a soil material, but it is also a compressed time. Clay is sediment, stone pressure, dust of collapsed architecture, and rehydrated into pliability. The materials are never neutral. They carry time within them. And when I work with them, I collaborate with memories. Connection of clay to electricity involves resurrecting its rhythm. To amplify its history. Observe how the stone moved once. Its rhythm allows this while it is immediate, affective, and vibrational. A crackle, a hum, a feedback loop that is not metaphor, but material consequence.

Toward a sonic materialism of practice: dielectrics as sympoietic outcome

What might it mean to develop an art practice that is also material philosophy? A practice where matter speaks, not symbolically, but sonically: in pulses, feedback, vibration, and decay? What emerges is a practice that is neither visual nor sonic, nor scientific or poetic, but something in between. It exists in the seams of disciplines: and is a state of potential that can only be accessed through observation and listening.

Studio becomes a hybrid field: part chemistry lab, part sound studio, and part sculpture workshop. The artwork is not finished on a wall. It is never finished. It ages. It feeds back. It reacts to light, air, and touch. Visual materials are energy vessels, timekeepers, and conductors of invisible change. To listen to matters is to decentre ourselves. It is to let materials guide the composition, and recognize that they hold knowledge — not as tools, but as participants. This is an ethics of attention, care, and shared temporality.

The culmination of this research emerged in *Dielectrics*, a sound-visual installation and performance realized during my residency at DA LAB in Sofia. Over four weeks, the studio transformed into a resonant ecosystem in which materials, circuits, and bodies became co-actors in an unfinished composition. Rather than presenting finished objects, installation- staged processes include: matter unfolding, currents adjustment, and atmospheric modulation. Sound here was not an aesthetic layer added to the materials, but their mode of relation — a sonic ecology in which drying, breathing, and conducting were rendered audible. (Figure 5)

The live electronics performance extended this ecology into collective listening. The work became a field of cohabitation: audiences attuned to the pulses of shifting resistances, performers responded to fluctuations beyond control, and the environment — humidity, temperature, presence — left its trace in the unfolding soundscape. No single element held mastery. Instead, the performance enacted what Donna Haraway names *sympoiesis*: "making-with," a practice of shared becoming.

In this outcome, the composition is less about arrangement than attention. It is the practice of holding space for materials to speak, and notice their rhythms without demanding stability. This is what a sonic materialism of practice makes possible: not objects to be preserved, but relations to be lived. Beyond the studio walls, *Dielectrics* seeded further exchanges: workshops on DIY microphones turned discarded materials into instruments, and conversations with local artists opened the



Figures 5. Documentation from the Dielectrics exhibition and performance. The main intervention of the residency used fresh slow-drying clay and self-made circuits to explore the acoustic and material qualities of organic matter. A changing soundscape from the installation demonstrated how natural materials can actively engage in creating sonic works. The Dielectrics project, as part of the Toolkit of Care program, was presented in Sofia's Art Academy during the DA LAB residency and culminated in a performance of live electronics that involved taking the installation and turning it into a collective organism of people and things working together and against one another by making a rich auditory experience.

work into broader ecologies of practice. These activities reinforced the installation's ethos — that creativity is not a solitary invention but a distributed, entangled making.

Dielectrics demonstrate that an artwork can be experiment, composition, and ecology at once. It embodies an organism-oriented ontology where matter is not a substrate but a participant, and sound is not a decoration but an evidence of relation. The outcome is not closure but continuation — an unfinished organism whose rhythms will persist across future works, vibrating in uncertain spaces between art, science, and philosophy.

Ethics and consent

This study is based on artistic and practice-based research and did not involve clinical experimentation or the collection of sensitive personal data. Ethical approval and consent were not required.

All images included in the manuscript have been reviewed for identifiability. Any potentially identifiable personal information has been removed or obscured. In particular, Figure 3 and Figure 5, Figure 6, Figure 7 have been de-identified to ensure that individuals cannot be recognized.

Where individuals were present during documentation of the Sympoietic Echo-Systems: Dielectrics installation, consent to publish was obtained where applicable. No images of identifiable individuals are included without appropriate consent.



Figures 6. Documentation from the Dielectrics exhibition and performance. The main intervention of the residency used fresh slow-drying clay and self-made circuits to explore the acoustic and material qualities of organic matter. A changing soundscape from the installation demonstrated how natural materials can actively engage in creating sonic works. The Dielectrics project, as part of the Toolkit of Care program, was presented in Sofia's Art Academy during the DA LAB residency and culminated in a performance of live electronics that involved taking the installation and turning it into a collective organism of people and things working together and against one another by making a rich auditory experience.



Figures 7. Documentation from the Dielectrics exhibition and performance. The main intervention of the residency used fresh slow-drying clay and self-made circuits to explore the acoustic and material qualities of organic matter. A changing soundscape from the installation demonstrated how natural materials can actively engage in creating sonic works. The Dielectrics project, as part of the Toolkit of Care program, was presented in Sofia's Art Academy during the DA LAB residency and culminated in a performance of live electronics that involved taking the installation and turning it into a collective organism of people and things working together and against one another by making a rich auditory experience.

Data availability statement

The data and materials supporting the results of this study, including recordings, schematics of self-built instruments, and documentation of the Sympoietic Echo-Systems: Dielectrics installation, are available in the Toolkit of Care project archive. Access can be requested via https://toolkitof.care/archive/sympoietic-echo-systems-dielectrics. All data are provided for non-commercial research and educational purposes. Any additional materials or queries can be directed to the author (kousteridoudimitra@gmail.com)

References

Anderson B, McFarlane C: **Assemblage and geography.** *Area.* 2011; **43**(2): 124–127.
Reference Source

Brickler P: **Painting materials: a short Encyclopaedia.** London: Thames & Hudson, 2013.

Cimini A: **Becoming musical: deleuze and Spinoza on affect and composition.** *Pli: The Warwick Journal of Philosophy.* 2010; **21**: 62–87.

Deleuze G, Guattari F: **A thousand plateaus: capitalism and schizophrenia.** Translated by Brian Massumi. Minneapolis: University of Minnesota Press, 1987.
Reference Source

Haraway DJ: **Staying with the trouble: making Kin in the Chthulucene.** Durham: Duke University Press, 2016.
Publisher Full Text

Hustak C, Myers N: **Involutionary momentum: affective ecologies and the sciences of Plant/Insect encounters.** *Differences: A Journal of Feminist Cultural Studies.* 2012; **23**(3): 74–118.
Publisher Full Text

Labatut B: **When we cease to understand the world.** London: Pushkin Press, 2020.
Reference Source

Latour B: **Reassembling the social: an introduction to actor-network-theory.** Oxford: Oxford University Press, 2005.
Reference Source

Müller M: **Assemblages and actor-networks: rethinking socio-material power, politics and space.** *Geogr Compass.* 2015; **9**(1): 27–41.
Publisher Full Text

Roda A: **Organology and material culture: the case of the Gamelan.** *The World of Music.* 2007; **49**(2): 21–41.

Voegelin S: **Sonic possible worlds: hearing the continuum of sound.** New York: Bloomsbury Academic, 2014.
Reference Source

Voegelin S: **Listening to noise and silence: towards a philosophy of sound art.** New York: Bloomsbury Academic, 2010.
Reference Source

Open Peer Review

Current Peer Review Status: ? ? ?

Version 1

Reviewer Report 02 June 2026

https://doi.org/10.21956/openreseurope.23230.r73146

© **2026 Veloso A et al.** This is an open access peer review report distributed under the terms of the Creative Commons Attribution License, which permits unrestricted use, distribution, and reproduction in any medium, provided the original work is properly cited.

?

Ana Luísa Veloso
University of Aveiro, Aveiro, Portugal
Alfonso Benetti Junior
INET-md – Institute of Ethnomusicology: Center for Studies in Music and Dance , Department of Communication and Art, University of Aveiro, Aveiro, Portugal

This article presents an artistic research inquiry investigation whether and how one might listen to the transformation of matter, through processes of sonification. The author frames this as a hybrid studio practice visual and visual art, in which the sound produced through electronic circuit “translates”, the conductive materials of sculptures and paintings. The research culminates in the installation and live performance Dielectrics, developed during a residency at DA LAB in Sofia, extending the work into collective listening and where the work and the audience transform in a “collective organism” The article presents an engaging artistic research project crossing the field of sound art, and posthuman/new materialist perspectives.

The performative and poetic writing style effectively embodies the experiential dimensions of the work, and the visual documentation supports the reader’s understanding of the final installation and performance. However, while the article is conceptually rich, its theoretical and methodological articulation remains underdeveloped. The text references a broad range of frameworks — sonic materialism, assemblage theory, sympoiesis, organism-oriented ontology, actor-network theory, but the relationship between theory and practice would benefit from stronger dialogue. The authors cited are often mentioned in passing, without any in-depth discussion of their theories or clear connection between these and artistic practice – both in terms of process and results. We suggest that in a revised version, the author should select 2–3 key conceptual ideas and develop them more substantially and in closer articulation with the artistic practice. We also think that this extends to the necessity of references to other artists and works of art based on the same principles and using similar processes.

The proposition of working “across” art and science would also require greater conceptual clarification. At present, this relationship is suggested rather than critically articulated. A more explicit discussion of how the project understands and negotiates the intersections between

artistic and scientific modes of knowledge production could considerably strengthen the article. This may also open an interesting dialogue with emerging understandings of artistic research practice as a form of 2 transdisciplinary knowledge production, which seems highly relevant to the concerns of the manuscript. The discussion surrounding “matter,” “process,” and “sound” could also benefit from a deeper engagement with contemporary debates in artistic research concerning the dissolution of boundaries between process and product. In its current form, the article gestures toward these questions but does not fully develop their methodological implications. Expanding this perspective could reinforce the article’s contribution to current discussions on artistic research methodologies and processoriented artistic practices. Another issue is repetition. Many expressions/words are repeated throughout the text with only slight variation: matter “speaks,” or “hums” or “cracks” and the studio becomes an “hybrid field” or an “hybrid site” or “resonant ecosystem”. This extends to the “not…but” construction of sentences, repeated over and over again throughout the text. While repetition may be partially intentional as a poetic strategy, it sometimes becomes tiring, without adding nothing new. While repetition may function as a deliberate poetic strategy, the manuscript as a whole tends to reiterate similar descriptions and argumentative structures across sections. This repetition occasionally reduces the analytical depth of the discussion.

For instance, the philosophical framework associated with materiality appears dispersed throughout the text in a fragmented manner, which ultimately weakens its conceptual force and coherence. A more focused and sustained engagement with the central philosophical propositions would strengthen the article’s theoretical contribution and provide greater consistency between conceptual framing and artistic practice. This idea of repetition relates also to the balance between poetic language and analytical depth. The performative writing is compelling, but at times the text risks drifting into metaphorical abstraction without sufficiently analysis and triangulation with the literature and the concepts that are referred. Statements such as “clay is a waiting signal” or “graphite flickers with voltage” are evocative, yet the article occasionally depends too heavily on poetic affirmations rather than sustained conceptual reflexion.

Given the relevance of both the artistic outcomes and the theoretical body that is evoked, the article would benefit from a brief discussion of possible future developments and implications of this line of research. Expanding on how these methodologies, materials, or listening practices might inform future artistic or interdisciplinary investigations would help situate the project within broader ongoing debates in sound art and artistic research. The references section is also relatively limited given the theoretical density of the article. Important areas of sound studies, artistic research methodology, sonic epistemology, and sonic methodology, 3 are only lightly represented. Additionally, several concepts appear without clear attribution, and some authors are referenced in the text without dates and/or without appearing in the references section.

Is the topic of the essay discussed accurately in the context of the current literature?

Partly

Is the work clearly and cogently presented?

Partly

Is the argument persuasive and supported by appropriate evidence?

No

Does the essay contribute to the cultural, historical, social understanding of the field?
Yes

Competing Interests: No competing interests were disclosed.

We confirm that we have read this submission and believe that we have an appropriate level of expertise to confirm that it is of an acceptable scientific standard, however we have significant reservations, as outlined above.

Reviewer Report 22 May 2026

https://doi.org/10.21956/openreseurope.23230.r73152

© 2026 García Y. This is an open access peer review report distributed under the terms of the Creative Commons Attribution License, which permits unrestricted use, distribution, and reproduction in any medium, provided the original work is properly cited.

?

Yurima Blanco García
Universidad de Valladolid, Palencia, Spain

Thank you for the opportunity to review this work. I find the subject matter to be very interesting and innovative. I believe the article's performative approach serves as the primary framework for understanding the author's artistic and philosophical discourse.
I believe the work is very useful for reflecting on sound, silence, listening, the materiality of sound, and sound art, and it highlights its potential as a medium for blurring the boundaries between artistic and academic disciplines. The description of the creative process is very enriching and conveys the aesthetic experience in a vivid, experiential way.
Since this is a performative research project, where sound is a key element of the process, I propose some areas for improvement:
1. I believe the essay's topic should engage with key authors and references on sound: it would be interesting to situate a reflection based on the author's proposal within the context of Pierre Schaeffer's ideas on the sound object; as well as with R. M. Schafer on the relevance of sound and its cultural and historical evolution; finally, the modes of listening explored by F. Delalande in various texts can help us understand the relationships between materials (including sound) during the creative process, both from the author's perspective (as an artist and subject) and from that of the audiences/participants.
2. Throughout the text, metaphors are used to describe sounds; however, there are other references that describe sonic qualities and effects that can be adapted to the work, particularly with regard to different sonic textures: for example, "rough" sounds, "stretched" sounds, "smooth" sounds, "vibrant" sounds, etc. It would be very interesting to adopt a taxonomy of the materiality of sounds, thereby making it easier for the reader to "listen" to the creations proposed by the author.
3. Regarding the clarity of the exposition, I suggest a more thorough review of the text to avoid some repetitions. At various points, the author repeats ideas that could be consolidated in a single place, which would make the text clearer and more concise.

I believe this work offers great potential for researchers, artists, educators, and members of the public interested in trends related to listening, ecology, sound art, and performance, among other areas. It is a thematic area that is gaining increasing prominence in the scientific literature.

Is the topic of the essay discussed accurately in the context of the current literature?
Partly

Is the work clearly and cogently presented?
Partly

Is the argument persuasive and supported by appropriate evidence?
Yes

Does the essay contribute to the cultural, historical, social understanding of the field?
Yes

Competing Interests: No competing interests were disclosed.

Reviewer Expertise: As a musicologist and music teacher, one of my areas of research focuses on soundscapes and their potential applications in contemporary music education. I believe I have the academic expertise to contribute to the review of this text.

I confirm that I have read this submission and believe that I have an appropriate level of expertise to confirm that it is of an acceptable scientific standard, however I have significant reservations, as outlined above.

Reviewer Report 08 May 2026

https://doi.org/10.21956/openreseurope.23230.r72575

© 2026 Mullen M. This is an open access peer review report distributed under the terms of the Creative Commons Attribution License, which permits unrestricted use, distribution, and reproduction in any medium, provided the original work is properly cited.

?

Molly Mullen
The University of Auckland, Auckland, New Zealand

Thank you for the opportunity to peer review this article. In my view this piece makes a novel, thought provoking contribution to ideas about artistic practice and research that happens at the 'seams' of disciplines. It may well also contribute to thinking about the intersections of materiality and the sonic and about the practice of composition. It has something to offer artistic practice researchers and also scholars interested in 'new materialism' and 'post-humanism'. I first highlight what I think our strengths of this piece and then identify areas that could be developed to further strengthen it.

Note, the level of revisions required, in my view, depends on what kinds of research outputs Open Research Europe accepts or wants to publish. If the journal wants submissions to conform to a standard research article format, then substantial revisions would be required. If the journal publishes creative outputs or scholarly reports of practice, then the revisions would only need to be minor.

I found the authorial voice and the overall rhythm of this article highly engaging. It drew me into the world of the practice, giving me a 'feel' for the process and materials in a way that felt analogous to some of the aims of the practice being presented. The writing is performative, in the sense that it evokes or expresses key aspects of the research in its use of text and structure. The inclusion of short vignettes of studio practice and more poetic text work for me as a reader and fit the genre of this academic writing.

The article does an excellent job of setting out what it looks like/means to research in a generative way at the seams, or interfaces, between music, art, science and, I would add, philosophy. More than that, it unravels those seams, making evident the way a creative practice is simultaneously artistic, scientific, philosophical and musical.

The piece is timely, speaking to very current interests in materiality, relationality and listening. The practice presented, as described and theorised, in my view, pushes current thinking about these concepts/topics in new directions.

One of the questions asked of me as a reviewer was whether the topic of the essay is discussed accurately in the context of the current literature. In my view, the essay is adequately located in the context of current and seminal theory - referencing concepts including sonic materialism, posthumanism, sympoietics, assemblage, and Organism-Oriented Ontology. In places, I wanted the writer to go beyond telling me how the practice aligns with the concept/theory, and to get into a more sustained conversation with the literature cited. I would also suggest that the writer consider locating their practice in the context of other, past and present, similar artistic, musical, installation practices. Finally, for a research article, a more substantial review of literature on practice at this art-science interface might be needed - to support any claims about what this project contributes in respect to this topic.

Other overall suggestions that might strengthen this essay are:
-Reducing the repetition of ideas between sections in the essay, making it slightly more explicit what each section is adding.
-Consider including sound files as well as images, if the journal/publication allows for this.
-Consider some signalling early on about the different registers or 'voices' that are present in the writing
-Consider acknowledging Indigenous scholarship and ontologies that pre-date contemporary 'new' materialist thinking and in which matter has never been considered as inert.

More specific suggestions are:
-Page 5, in the final paragraph of the section 'Organism-Oriented ontology, assemblages..., can the writer say more about how the process undergone by a lump of clay is consistent with Deleuze's idea of adsorption? Expand on what is said here.
-Page 6, in the middle of the paragraph beginning 'Sympoeietic compositions...', the author says, "This resonates profoundly with my own practice". Can the writer be clearer on exactly what

resonates?
-Page 7. I think a reference is needed where there is a mention of Labatut's scientists. Also, there is something about the transition from the sentence: What, then, is composition? to "However, this is not a pure arrangement." that does not make sense.

Is the topic of the essay discussed accurately in the context of the current literature?
Partly

Is the work clearly and cogently presented?
Partly

Is the argument persuasive and supported by appropriate evidence?
Yes

Does the essay contribute to the cultural, historical, social understanding of the field?
Yes

Competing Interests: No competing interests were disclosed.

Reviewer Expertise: Theatre and performance in relation to ecology, economy and community.

I confirm that I have read this submission and believe that I have an appropriate level of expertise to confirm that it is of an acceptable scientific standard, however I have significant reservations, as outlined above.