Check for updates

RESEARCH ARTICLE

Nanosized titanium dioxide particle emission potential from a commercial indoor air purifier photocatalytic surface: A case study

[version 1; peer review: 4 approved]

Antti Joonas Koivisto[1-3], Sara Trabucco[4], Fabrizio Ravegnani[4], Francescopiero Calzolari[4], Alessia Nicosia[4], Benedetta Del Secco[4], Marko Altin[5], Elisa Morabito[6], Magda Blosi[7], Anna Costa[7], Franco Belosi[4]

[1]Air Pollution Management (APM), Mattilanmäki 38, 33610 Tampere, Finland
[2]Institute for Atmospheric and Earth System Research (INAR), University of Helsinki, PL 64, FI-00014, Helsinki, Finland
[3]ARCHE Consulting, Liefkensstraat 35D, B-9032 Wondelgem, Belgium
[4]ISAC-CRN, Institute of Atmospheric Sciences and Climate, National Research Council of Italy, Via Gobetti, 101, 40129 Bologna, Italy
[5]Witek srl, Via Siena 47, 50142 Firenze, 50142, Italy
[6]Department of Environmental Sciences, Informatics and Statistics, Cá Foscari University, Via Torino 155, 30172 Venice, Italy
[7]ISTEC-CNR, Institute of Science and Technology for Ceramics, National Research Council, Via Granarolo 64, 48018 Faenza, Italy

v1 **First published:** 04 Jul 2022, **2**:84
https://doi.org/10.12688/openreseurope.14771.1
Latest published: 04 Jul 2022, **2**:84
https://doi.org/10.12688/openreseurope.14771.1

Abstract

Background: Photocatalytic air purifiers based on nano-titanium dioxide (TiO_2) visible light activation provide an efficient solution for removing and degrading contaminants in air. The potential detachment of TiO_2 particles from the air purifier to indoor air could cause a safety concern. A TiO_2 release potential was measured for one commercially available photocatalytic air purifier "Gearbox Wivactive" to ensure a successful implementation of the photocatalytic air purifying technology.

Methods: In this study, the TiO_2 release was studied under laboratory-simulated conditions from a Gearbox Wivactive consisting of ceramic honeycombs coated with photocatalytic nitrogen doped TiO_2 particles. The TiO_2 particle release factor was measured in scalable units according to the photoactive surface area and volume flow (TiO_2-ng/m^2×m^3). The impact of Gearbox Wivactive on indoor concentration level under reasonable worst-case conditions was predicted by using the release factor and a well-mixed indoor aerosol model.

Results: The instrumentation and experimental setup was not sufficiently sensitive to quantify the emissions from the photoactive surfaces. The upper limit for TiO_2 mass release was $<185\times10^{-3}$ TiO_2-ng/m^2×m^3. Under realistic conditions the TiO_2 concentration level in a 20 m^3 room ventilated at rate of 0.5 1/h and containing two Gearbox Wivactive units resulted $<20\times10^{-3}$ TiO_2-ng/m^3.

Open Peer Review

Approval Status ✓ ✓ ✓ ✓

	1	2	3	4
version 1 04 Jul 2022	✓ view	✓ view	✓ view	✓ view

1. **Ridha Djellabi**, Universitat Rovira i Virgili, Tarragona, Spain
2. **Mahshab Sheraz**, Korea Institute of Industrial Technology, Ansan-si, South Korea Hallym University, Chuncheon-si, South Korea
3. **Marina Krichevskaya**, Tallinn University of Technology, Tallinn, Estonia
4. **Julie Hot**, LMDC, INSA/UPS Génie Civil, Toulouse, France

Any reports and responses or comments on the article can be found at the end of the article.

Conclusions: The release potential was quantified for a photocatalytic surface in generalized units that can be used to calculate the emission potential for different photocatalytic surfaces used in various operational conditions. This study shows that the TiO_2 nanoparticle release potential was low in this case and the release does not cause relevant exposure as compared to proposed occupational exposure limit values for nanosized TiO_2. The TiO_2 release risk was adequately controlled under reasonable worst-case operational conditions.

Keywords
Nanomaterial, TiO2, indoor air purifier, photocatalytic oxidation, release, emission, exposure, indoor aerosol



This article is included in the Horizon 2020 gateway.



This article is included in the Inorganic Chemistry gateway.



This article is included in the Analytical Techniques collection.



This article is included in the Nanomaterials collection.



This article is included in the Green Chemistry collection.

Corresponding author: Antti Joonas Koivisto (joonas.apm@gmail.com)

Author roles: Koivisto AJ: Conceptualization, Data Curation, Formal Analysis, Methodology, Writing – Original Draft Preparation; **Trabucco S**: Formal Analysis, Investigation, Writing – Review & Editing; **Ravegnani F**: Data Curation, Formal Analysis, Investigation, Writing – Review & Editing; **Calzolari F**: Data Curation, Formal Analysis, Investigation, Writing – Review & Editing; **Nicosia A**: Data Curation, Formal Analysis, Investigation, Writing – Review & Editing; **Del Secco B**: Data Curation, Formal Analysis, Investigation, Writing – Review & Editing; **Altin M**: Data Curation, Formal Analysis, Writing – Review & Editing; **Morabito E**: Data Curation, Formal Analysis, Writing – Review & Editing; **Blosi M**: Formal Analysis, Investigation, Writing – Review & Editing; **Costa A**: Formal Analysis, Funding Acquisition, Project Administration, Writing – Review & Editing; **Belosi F**: Conceptualization, Data Curation, Formal Analysis, Investigation, Methodology, Project Administration, Validation, Writing – Original Draft Preparation

Competing interests: AJK works as an independent consultant in Air Pollution Management (APM). MA is employed by Witek srl.

Grant information: This research was financially supported by the European Union's Horizon 2020 research and innovation programme under the grant agreement No 862444 (Anticipating Safety Issues at the Design Stage of NAno Product Development, ASINA). The funders had no role in study design, data collection and analysis, decision to publish, or preparation of the manuscript.
The funders had no role in study design, data collection and analysis, decision to publish, or preparation of the manuscript.

Copyright: © 2022 Koivisto AJ *et al*. This is an open access article distributed under the terms of the Creative Commons Attribution License, which permits unrestricted use, distribution, and reproduction in any medium, provided the original work is properly cited.

How to cite this article: Koivisto AJ, Trabucco S, Ravegnani F *et al.* **Nanosized titanium dioxide particle emission potential from a commercial indoor air purifier photocatalytic surface: A case study [version 1; peer review: 4 approved]** Open Research Europe 2022, **2**:84 https://doi.org/10.12688/openreseurope.14771.1

First published: 04 Jul 2022, **2**:84 https://doi.org/10.12688/openreseurope.14771.1

Plain language summary

Photocatalytic oxidation is a widely used technique to degrade air pollutants into non-toxic or less harmful forms and to deactivate viruses and bacteria. Visible light can activate nitrogen doped nanosized titanium dioxide (TiO_2N) that makes it a promising material in air purification devices. The potential release of nanosized TiO_2 is one risk factor that should be addressed adequately when applying this novel technology. Here we studied a release of TiO_2 nanoparticles from a commercially available air purifier called Gearbox Wivactive. The release factor was calculated in a generalized unit that can be used to calculate the emission potential for different photocatalytic surfaces used in various operational conditions. In this case study, it was possible to measure only upper estimate ($<48\times10^{-3}$ TiO_2-ng/m^2×m^3) for the Gearbox Wivactive photocatalytic surfaces. The risk related to the TiO_2 release potential was considered adequately controlled because the TiO_2 concentration level under reasonable worst-case conditions was below the proposed occupational exposure limit values for nanosized TiO_2.

List of abbreviations

ASINA	Anticipating Safety Issues at the Design Stage of NAno Product Development
CPC	Condensation particle counter
ICP-MS	Inductively coupled plasma mass spectrometry
iCAP RQ	Inductively-coupled argon-plasma radio quadrupole
OEL	Occupational exposure limit
OPC-N3	Optical particle counter Alphasense
PM	Particulate matter
REACH	Registration, Evaluation, Authorisation and Restriction of Chemicals
TiO_2	Titanium dioxide
TiO_2N	Nitrogen doped titanium dioxide

Introduction

Photocatalytic oxidation is the most promising technology for air purification. It can degrade diverse air pollutants into non-toxic or less harmful forms and deactivate viruses and bacteria using visible light under ambient conditions (Ângelo *et al.*, 2013; Chen *et al.*, 2015; Kotzias *et al.*, 2022; Poorhosseini *et al.*, 2011; Weon *et al.*, 2019). Nanosized titanium dioxide (TiO_2) and its modifications is the most adopted photocatalytic material for air treatment devices holding over 60% of the patents published between 2010 and 2020 (Muscetta & Russo, 2021). Current research and development is mainly focused on TiO_2 photocatalysis (He *et al.*, 2021). However, there is a concern on their safety under real indoor conditions which might limit their diffusion. Among the main challenges, these air purifiers should address there are the control of the pollutant degradation mechanism mineralization with drawbacks due to by-product formation (Vasilache *et al.*, 2013) and the adhesion of the photocatalyst to the substrate with potential drawbacks due to nanoparticles detachment. According to the authors knowledge, the potential release of nanoparticles (NPs) from air purifiers has not been studied previously (see also Koivisto *et al.*, 2017).

This study investigates the release of NPs from the photocatalytic air purifier "Gearbox Wivactive" manufactured by WITEK srl. The Gearbox Wivactive was selected as WITEK srl is part of the Anticipating Safety Issues at the Design Stage of NAno Product Development (ASINA) project with patented light technology for air purification by nano-titanium. The air purifier Gearbox Wivactive contains ceramic honeycombs coated with nanosized TiO_2N, which is widely used in photocatalytic oxidation activated by visible light (Natarajan *et al.*, 2021). The TiO_2 is a semiconductor with an energy gap equal to E_g = 3.2 eV, if it is irradiated with photons of energy greater than E_g (wavelength less than 388 nm), an electron is able to overcome the energy gap and is promoted from the valence band to the conduction band, while in the TiO_2N the energy gap is E_g = 2.7eV-2.9eV. Therefore, TiO_2N is able to get significantly excited also at visible wavelengths.

The activity was carried out in the framework of the European Union's Horizon 2020 ASINA project Task 2.1 "Identifying and quantifying release during all stages of nano-enabled products life-cycle" (see *Grant information*). The NP emissions were characterized for the Gearbox Wivactive as TiO_2-ng/(honeycomb × m^3 of ventilated air) and in generic form as TiO_2-ng/(m^2 of photoactive surface area × m^3 of ventilated air). The release rates were used to predict the TiO_2 exposure potential under relevant indoor conditions. The TiO_2N exposure risk was estimated by using a proposed occupational exposure limit (OEL) value for nanosized TiO_2.

Methods

Nanoparticle release tests were performed by using the modified air purifier under laboratory-simulated conditions. The exposure potential by nanoparticle release was estimated by using a single compartment mass flow model.

Gearbox Wivactive air purifier configuration

The working principle of the air purifier is shown in Figure 1. The system consists of a class G4 (EN 779:2012) prefilter (1) that removes the coarse fraction (particle diameter *ca.* >10 μm) of the airborne particles and microorganisms), three ceramic honeycombs coated with TiO_2N (2,3,4) and led light system (5) that activate the release of free oxidant radicals and a fan maintaining a flow through the system (6). The honeycombs are coated with TiO_2N suspension prepared by Colorobbia Italia, SPA (patent no. EP3788009A1; Sovigliana Nanomaterials Vinci, FI, Italy). Single honeycomb inner surface area ranges from 90 to 100 cm^2.

Two different experimental set-ups were considered by assembling specific Gearbox Wivactive units:

- Test 1: Close, static system by assembling a test unit from components 2–6 (Gearbox Wivactive modified A)
- Test 2: Open, dynamic system, by assembling a test unit from components 2–5 (Gearbox Wivactive modified B).

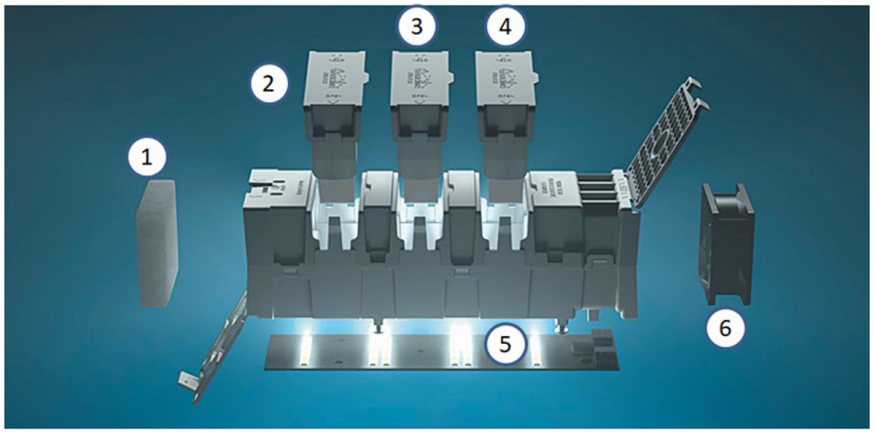

Figure 1. Gearbox Wivactive air purifier main components (reproduced with permission from the copyright holder, WITEK (WITEK, 2022)). 1) a prefilter, 2,3 and 4) photoactive honeycombs, 5) a light emitting diode light, 6) a fan.

Instrumentation

Particle number concentrations were measured from 4 nm by using a Condensation Particle Counter (CPC, TSI mod. 3775) at sample flow 5 cm^3/s and from *ca.* 300 nm by using an optical particle counter Alphasense (OPC-N3). OFF-line gravimetric particulate matter (PM) samples (total fraction) were taken by collecting particles on an absolute quartz fiber filter (Sartorius, grade T293, Goettingen, Germany). The filters were analyzed by using inductively-coupled argon-plasma radio quadrupole (iCAP RQ) mass spectrometer (ICP-MS; Thermo Fisher Scientific, Environmental Department of Cà Foscari University, Venice; lower limit of quantification (LOQ) is 1 ng). The flow rate was determined by averaging the inlet velocities measured by means of a hot wire anemometer (Terman ANM-0/B, LSI spa, Milan, Italy).

Experimental setup in Test 1

Test 1 was performed in a closed chamber with a volume of 220 L (Figure 2). Before measurements, the chamber was ventilated with filtered laboratory air (Quartz-Microfibers filter- Grade T293, Sartorius). The modified Gearbox Wivactive A was operated by using the standard fan (6) at flow rate of 7.7 m^3/h. The flow rate was determined by averaging the inlet velocities measured by means of a hot wire anemometer and considering a 7 cm × 6.6 cm inlet surface. This corresponds to about 30 air changes per hour.

The chamber total particle number concentration was measured continuously with the OPC-N3 recirculating the air inside the chamber. An external CPC was used to measure particle number concentration for *ca.* 1-minute at morning, noon and afternoon. This minimizes particle flow from laboratory air to the chamber. Tests were carried out continuously for three days which corresponds to *ca.* 540 m^3 recirculated air volume.

Assuming fully mixed concentrations inside the chamber the mass balance of particles is

$$V\frac{dC(t)}{dt} = G + C_{room}(t)\cdot P\cdot Q - (\lambda\cdot V - Q)C(t) \quad (1)$$

Where V (m^3) is the chamber volume, $C(t)$ ($1/m^3$) is the number concentration of contaminants in the chamber, t is the time (s), G (1/s) is the release rate of airborne particles, $C_{room}(t)$ ($1/m^3$) is the laboratory room air concentration which penetrates the chamber at efficiency of P (-), Q (m^3/s) is the chamber ventilation air volume flow rate, and λ (1/s) is the particle loss rate onto the surfaces inside the chamber. When assuming $Q \approx 0$ m^3/s and particle losses on the surfaces $\lambda \approx 0$ 1/s the mass balance equation is simplified to

$$V\frac{dC(t)}{dt} = G \quad (2)$$

This can be used to estimate the emission rate from the OPC-N3 concentration time series.

Experimental setup in Test 2

Test 2 was carried out by using the modified Gearbox Wivactive B connected to the quartz filter and maintaining 4.4 m^3/h air flow by using an external pump (Bravo H-Plus, TCR Tecora, Cogliate, Italy). Two different configurations were used: Test 2A was performed with laboratory air and Test 2B was performed by using recirculated air (Figure 3). Particle release was estimated by collecting Ti mass on a quartz filter and calculated as mass of TiO_2 per ventilation volume (TiO_2-ng/m^3). In Test 2A it is assumed that the laboratory room air does not contain Ti and the emission rate is calculated by assuming that Ti release is independent of the Gearbox Wivactive volume flow rate.

Exposure potential simulation

The reasonable worst-case simulation was performed by using a single compartment model where air is considered to be fully mixed all the time. The Gearbox Wivactive is assumed to operate without G4 prefilter (component 1 in Figure 1) and the TiO_2 particle filtration is considered insignificant. The Gearbox Wivactive flow rate is assumed to be 20 m^3/h and two Gearbox Wivactive systems are assumed to operating in a 20 m^3 room. This corresponds to 2 1/h air recirculation rate through the two air purifiers. The room general ventilation is assumed to be

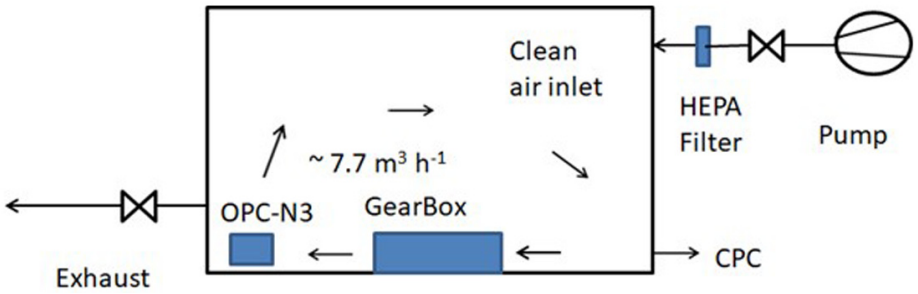

Figure 2. Test 1 experimental set up where the Gearbox Wivactive recirculates the air inside a closed chamber. CPC, condensation particle counter; OPC-N3, optical particle counter Alphasense; HEPA, high efficiency particulate air.

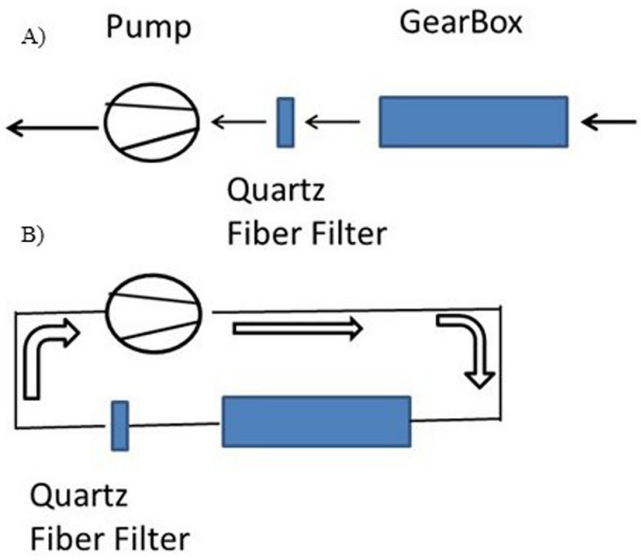

Figure 3. Scheme of the Test 2 experimental set up where **A**) laboratory air is aspirated through the Gearbox Wivactive and **B**) air is recirculated in a sealed circuit.

0.5 1/h representing typical ventilation rate in European dwellings (Dimitroulopoulou, 2012).

Modelling was performed using a deterministic single compartment model (Task Exposure Assessment Simulator (TEAS) 2019 V 1.00, model No. 101, Exposure Assessment Solutions, Inc., Morgantown, MI, USA). TEAS is a commercial software. The model is described in detail by Hewett & Ganser (2017). A free, alternative model is IH Mod 2.0 (requires Microsoft Excel).

Results

Emission measurements

In Test 1, CPC measurements increased the particle number concentrations during the one-minute measurement period due to external air infiltration to replace the sampled volume. For further information, see *Underlying data* (Koivisto *et al.*, 2022).

The background concentration varied from *ca.* 4 to 14 1/cm^3 prior switching the Gearbox Wivactive on after which the concentrations varied from *ca.* 1 to 16 1/cm^3 (Figure 4).

The particle number concentration time derivative was calculated for the OPC-N3 measurement when CPC sampling was not performed. The average emission rate was $1\times10^{-4} \pm 0.02$ 1/(cm^3×s) where variation is one standard deviation (Figure 5). Assuming fully mixed concentrations and no particle losses inside the chamber, the emission rate was up to 4400 1/s (when given as one standard deviation upper range) according to the OPC-N2. The result is not considered as reliable because of the high lower particle count limit in OPC-N2 and large chamber volume of 220 L. The result can be used as indicative evidence for low particle release.

Particles collected in Test 2A and B to quartz fiber filter samples and the blank field filters sampling from laboratory air were analyzed by means of the iCAP RQ ICP-MS; see *Underlying data* (Koivisto *et al.*, 2022). The amount of Ti was below the lower LOQ in all samples. Table 1 shows the sampling parameters and the upper estimates for the release as Ti and TiO_2.

Exposure potential simulation

The upper limit for TiO_2 mass emission measured in Test 2A was used to predict the maximum exposure potential by using the TEAS model no. 101. The emission rate for different volume flows and coated surface areas can be calculated by using Test 2A release factor of $<185\times10^{-3}$ TiO_2-ng/m^2×m^3. Assuming that two Gearbox Wivactive systems are operated at 10 m^3/h each the emission rate would be <3.7 TiO_2-ng/min for a total photoactive surface area 0.06 m^2 and a flow rate 0.33 m^3/min. In a 20 m^3 ventilated at 0.5 1/h rate and assuming the air fully mixed, the concentration after 10 h continuous run reaches steady-state level at $<20\times10^{-3}$ TiO_2-ng/m^3; see Koivisto *et al.* (2022).

Discussion

The release was not possible to quantify within these experiments due to low release as compared to the instruments lower LOQ. The TiO_2 mass release was $<185\times10^{-3}$ TiO_2-ng/m^2×m^3. Under realistic conditions the TiO_2 concentration level would increase to $<20\times10^{-3}$ TiO_2-ng/m^3. Current proposed OELs vary for nano-TiO_2 from 0.8 to 5000 µg/m^3 when given in different size fractions and specified under different experimental conditions for 8-h time weighted average (ANSES, 2021; Mihalache *et al.*, 2017; WHO, 2017). For 24-h exposure the limit would be three times lower that would mimic public population exposure. Because there are no legally binging limit values for nanosized

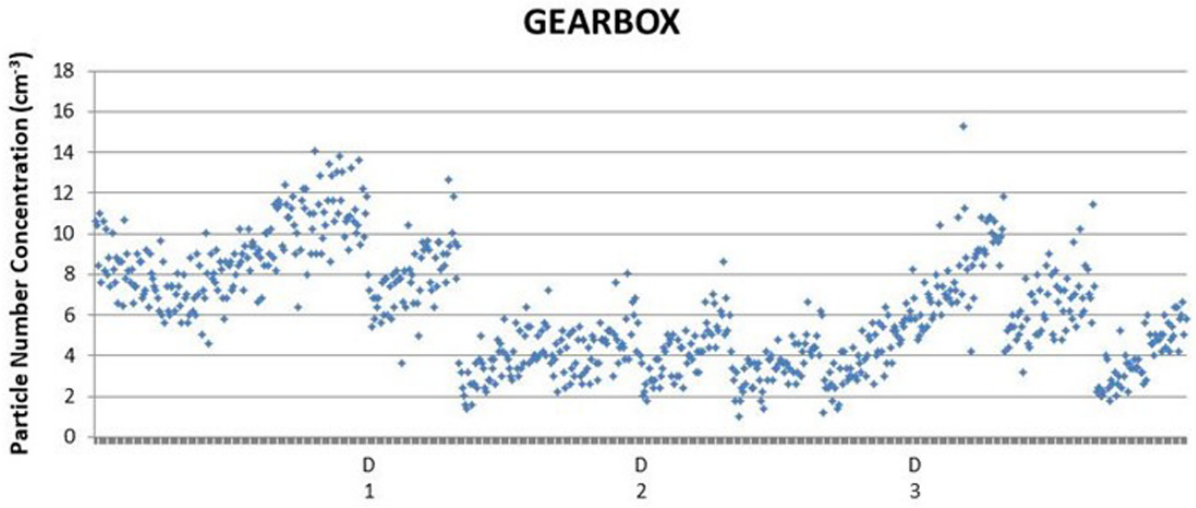

Figure 4. Single condensation particle counter measurements over three days. The concentration pattern is increasing due to external air infiltration (Koivisto *et al.*, 2022).

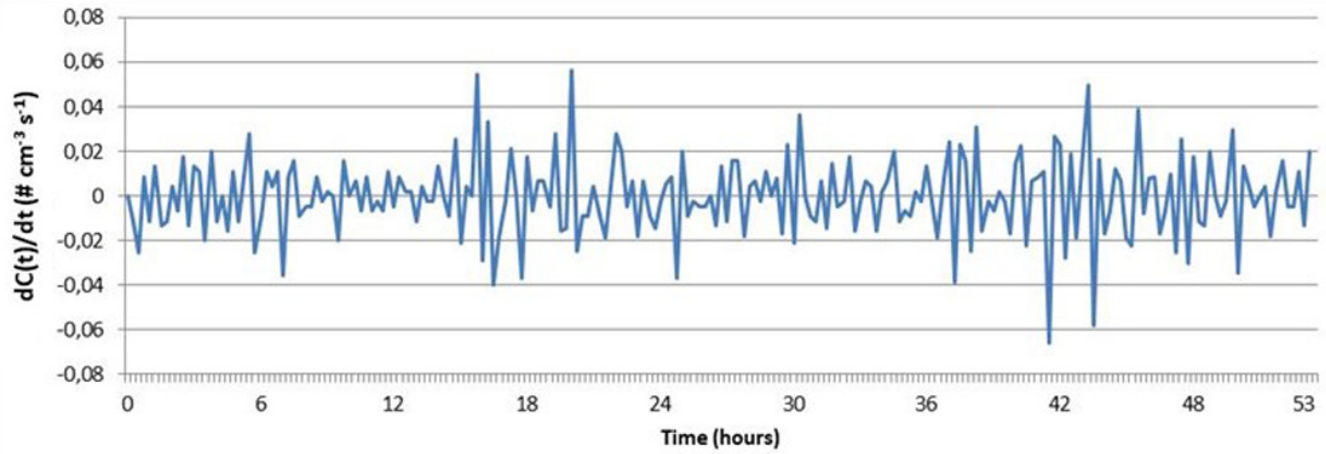

Figure 5. Time derivative of the particle number concentration inside the box (each point is 15 minutes averaged concentration). See Koivisto *et al.*, 2022.

Table 1. Test 2A and 2B Ti (titanium) emission measurements given as release per ventilation volume (ng/m³) and emission rate (ng/h) for a single Gearbox Wivactive system containing three photoactive honeycombs units and in generalized units as release per surface area and ventilation volume. For more information see *Underlying data* (Koivisto *et al.*, 2022). TiO_2 emissions were calculated from Ti gravimetric mass and atomic masses of Ti and TiO_2 (Koivisto *et al.*, 2022).

Test	Sampling time (h)	Volume (m^3)	Ti (ng/m^3)	TiO_2 (ng/m^3)	TiO_2 (ng/h)	TiO_2 ($ng/m^2 \times m^3$)
Test 2A	96	303.7	$< 3\times10^{-3}$	$< 5\times10^{-3}$	$<1.7\times10^{-2}$	$<185\times10^{-3}$
Test 2B	72	229.6	$< 4\times10^{-3}$	$< 7\times10^{-3}$	$<2.2\times10^{-2}$	$<259\times10^{-3}$

TiO_2 it is not possible perform regulatory risk assessment under Registration, Evaluation, Authorisation and Restriction of Chemicals (REACH) framework (ECHA, 2016a; ECHA, 2016b). However, the indicative analysis shows that the Gearbox

Wivactive does not release TiO_2 nanoparticles in relevant quantities as compared to the current proposed occupational exposure limit values for nanosized TiO_2. Release factor given in general form can be used to estimate the upper limit of release for different photocatalytic surface and volume flow settings.

Conclusions

The potential release of particles from the air purifier Gearbox Wivactive (Ti-coated honeycombs units) has been investigated by means of a CPC (particles above 4 nm) and an OPC-N3 (particles above 300 nm) in a close chamber and total Ti-mass collected on a quartz filter in an open and sealed-circuit system. Chamber studies did not have a sufficient sensitivity to detect low particle concentrations in below few $1/cm^3$ to quantify emissions at sufficient precision. However, indicative emission of 4400 1/s quantified from OPC-N3 measurements shows low emissions. Chemical analysis of quartz filter samples revealed that the release is below $<185\times10^{-3}$ TiO_2-$ng/m^2\times m^3$. The release factor can be used to predict emissions from different TiO_2N based photocatalytic surfaces. Under reasonable indoor conditions, the maximum exposure potential was $<20\times10^{-3}$ TiO_2-ng/m^3 when using two Gearbox Wivactive air purifiers over 10 h. Preliminary risk assessment based on proposed OELs shows adequately controlled risk related to TiO_2 release potential.

Data availability

Underlying data

Zenodo: Nanosized titanium dioxide particle emission potential from a commercial indoor air purifier photocatalytic surface – A case study. https://doi.org/10.5281/zenodo.6547915 (Koivisto *et al*., 2022).

This project contains the following underlying data:

- CPC.xlsx (Condensation particle counter measurement file).
- OPC Alphasense.xlsx (OPC Alphasense measurement file).
- ICP-Mass.xlsx (ICP mass measurement file).
- GearBox TEAS simulation.pdf (Exposure potential simulation file generated by TEAS).
- Modeling.xlsx (Calculation of the simulation parameters).

Data are available under the terms of the Creative Commons Attribution 4.0 International license (CC-BY 4.0).

Ethics and consent

Ethical approval and consent were not required.

References

Ângelo J, Andrade L, Madeira LM, *et al.*: **An overview of photocatalysis phenomena applied to NOx abatement.** *J Environ Manage.* 2013; **129**: 522–539.
PubMed Abstract | Publisher Full Text

ANSES: **Recommended occupational exposure limits for titanium dioxide nanoparticles. Anses - Agence nationale de sécurité sanitaire de l'alimentation, de l'environnement et du travail**. 2021; (accessed 12.3.21).
Reference Source

Chen J, Qiu F, Xu W, *et al.*: **Recent progress in enhancing photocatalytic efficiency of TiO 2 -based materials**. *Applied Catalysis A: General.* 2015; **495**: 131–140.
Publisher Full Text

Dimitroulopoulou C: **Ventilation in European dwellings: A review.** *Building and Environment.* 2012; **47**: 109–125.
Publisher Full Text

ECHA: **Guidance on Information Requirements and Chemical Safety Assessment, 2016b, Chapter R.14: Occupational exposure assessment.** 2016a.

ECHA: **Guidance on information requirements and chemical safety assessment chapter R.15: consumer exposure assessment**. ECHA, Helsinki, 2016b.
Reference Source

EN 779: **Particulate air filters for general ventilation - Determination of the filtration performance**. n.d. 2012.
Reference Source

He F, Jeon W, Choi W: **Photocatalytic air purification mimicking the self-cleaning process of the atmosphere.** *Nat Commun.* 2021; **12**(1): 2528.
PubMed Abstract | Publisher Full Text | Free Full Text

Hewett P, Ganser GH: **Models for nearly every occasion: Part I - One box models.** *J Occup Environ Hyg.* 2017; **14**(1): 49–57.
PubMed Abstract | Publisher Full Text

Koivisto AJ, Jensen ACØ, Kling KI, *et al.*: **Quantitative material releases from products and articles containing manufactured nanomaterials: Towards a release library.** *NanoImpact.* 2017; **5**: 119–132.
Publisher Full Text

Koivisto AJ, Trabucco S, Ravegnani F, *et al.*: **Nanosized titanium dioxide particle emission potential from a commercial indoor air purifier photocatalytic surface – A case study.** *Dataset.* 2022.
http://www.doi.org/10.5281/zenodo.6547915

Kotzias D, Binas V, Kiriakidis G: **Smart Surfaces: Photocatalytic Degradation of Priority Pollutants on TiO_2 Based Coatings in Indoor and Outdoor Environments—Principles and Mechanisms.** *Materials (Basel).* 2022; **15**(2): 402.
PubMed Abstract | Publisher Full Text | Free Full Text

Mihalache R, Verbeek J, Graczyk H, *et al.*: **Occupational exposure limits for manufactured nanomaterials, a systematic review.** *Nanotoxicology.* 2017; **11**(1): 7–19.
PubMed Abstract | Publisher Full Text

Muscetta M, Russo D: **Photocatalytic Applications in Wastewater and Air Treatment: A Patent Review (2010–2020).** *Catalysts.* 2021; **11**(7): 834.
Publisher Full Text

Natarajan TS, Mozhiarasi V, Tayade RJ: **Nitrogen Doped Titanium Dioxide (N-TiO2): Synopsis of Synthesis Methodologies, Doping Mechanisms, Property Evaluation and Visible Light Photocatalytic Applications.** *Photochem.* 2021; **1**(3): 371–410.
Publisher Full Text

Poorhosseini H, Mousavi M, Nematipour E, *et al.*: **Success rate, procedural complications and clinical outcomes of coronary interventions in octogenarians: a case-control study.** *J Tehran Heart Cent.* 2011; **6**(3): 126–133.
PubMed Abstract | Free Full Text

Vasilache T, Lazar I, Stamate M, *et al.*: **Possible Environmental Risks of Photocatalysis used for Water and Air Depollution - Case of Phosgene Generation.** *APCBEE Procedia.* 2013; **5**: 181–185.
Publisher Full Text

Weon S, He F, Choi W: **Status and challenges in photocatalytic nanotechnology for cleaning air polluted with volatile organic compounds: visible light utilization and catalyst deactivation.** *Environ Sci Nano.* 2019; **6**: 3185–3214.
Publisher Full Text

WHO: **WHO guidelines on protecting workers from potential risks of manufactured nanomaterials**. World Health Organization, Geneva, 2017.
PubMed Abstract

WITEK: **AIRPanel | WITEK Group [WWW Document]**. 2022; (accessed 4.19.22).
Reference Source

Open Peer Review

Current Peer Review Status: ✔ ✔ ✔ ✔

Version 1

Reviewer Report 13 July 2023

https://doi.org/10.21956/openreseurope.15956.r32164

© **2023 Hot J.** This is an open access peer review report distributed under the terms of the Creative Commons Attribution License, which permits unrestricted use, distribution, and reproduction in any medium, provided the original work is properly cited.

✔ **Julie Hot**
LMDC, INSA/UPS Génie Civil, Toulouse, France

This paper deals with the TiO2 release for a commercial photocatalytic air purifier “Gearbox Wivactive”. The experiments were carried out at a laboratory scale. The study is interesting because it focuses on a challenging issue associated with photocatalytic products, namely the release of nanoparticles.

Here are few remarks:

- Introduction: Remove the comma after the word challenges -> “Among the main challenges these…”, remove the “s” after “authors” -> “according to the author knowledge” or write “authors’ knowledge”

- Introduction: You mentioned that NP emissions are expressed as “TiO2-ng/(honeycomb × m3 of ventilated air) and in generic form as TiO2-ng/(m2 of photoactive surface area × m3 of ventilated air)”. So, when you expressed quantitate results throughout the article, you should write ng/(m2xm3) (with brackets) and not ng/m2xm3. Moreover, is m2 not missing before “honeycomb”?

- Introduction: The following sentence is too long: “The TiO2 is a semiconductor with an energy gap equal to Eg = 3.2 eV, if it is irradiated with photons of energy greater than Eg (wavelength less than 388 nm), an electron is able to overcome the energy gap and is promoted from the valence band to the conduction band, while in the TiO2N the energy gap is Eg = 2.7eV-2.9eV.”

- Methods/Gearbox Wivactive air purifier configuration: Remove “)” after microorganisms.

- Methods/Gearbox Wivactive air purifier configuration: What was the purpose of running two different tests? Please explain your choice. Moreover, Test 1 was described as “static” but was carried out with a fan. It is confusing.

- Methods/Experimental setup in Test 2: Why were the two configurations Test 2a and 2B

used?

- Results/Emission measurements: OPC-N2 was mentioned. OPC-N3 should be written instead.
- Results/Exposure potential simulation: Please check the result 3.7 TiO2-ng/min.
- Discussion: Add “to” -> “it is not possible to perform”.

I agree to the passing peer review of this article after these minor modifications.

Is the work clearly and accurately presented and does it cite the current literature?
Yes

Is the study design appropriate and does the work have academic merit?
Yes

Are sufficient details of methods and analysis provided to allow replication by others?
Partly

If applicable, is the statistical analysis and its interpretation appropriate?
Yes

Are all the source data underlying the results available to ensure full reproducibility?
Partly

Are the conclusions drawn adequately supported by the results?
Yes

Competing Interests: No competing interests were disclosed.

Reviewer Expertise: The article is interesting. Minor changes are required. I believe that I have enough knowledge in this research field to assess the quality of its content.

I confirm that I have read this submission and believe that I have an appropriate level of expertise to confirm that it is of an acceptable scientific standard.

Reviewer Report 12 July 2023

https://doi.org/10.21956/openreseurope.15956.r32165

© 2023 Krichevskaya M. This is an open access peer review report distributed under the terms of the Creative Commons Attribution License, which permits unrestricted use, distribution, and reproduction in any medium, provided the original work is properly cited.

Marina Krichevskaya

Tallinn University of Technology, Tallinn, Estonia

A very relevant and interesting case study on whether the emission of nanoparticles from a photocatalytic air purifier is a problem.

Comments
Abstract - “Photocatalytic air purifiers based on nano-titanium dioxide (TiO_2) visible light activation provide a...” Just a note: titanium dioxide cannot be activated by visible light unless modified.

Methods - The adhesion of particles depends on the coating method. Is at least general information about coating technology available? What are the characteristics (at least the size) of the TiO_2N particles that were used for the coating?

Is the work clearly and accurately presented and does it cite the current literature?
Yes

Is the study design appropriate and does the work have academic merit?
Yes

Are sufficient details of methods and analysis provided to allow replication by others?
Partly

If applicable, is the statistical analysis and its interpretation appropriate?
Not applicable

Are all the source data underlying the results available to ensure full reproducibility?
Yes

Are the conclusions drawn adequately supported by the results?
Yes

Competing Interests: No competing interests were disclosed.

Reviewer Expertise: Photocatalysis, AOP

I confirm that I have read this submission and believe that I have an appropriate level of expertise to confirm that it is of an acceptable scientific standard.

Reviewer Report 08 June 2023

https://doi.org/10.21956/openreseurope.15956.r32161

© 2023 Sheraz M. This is an open access peer review report distributed under the terms of the Creative Commons Attribution License, which permits unrestricted use, distribution, and reproduction in any medium, provided the original work is properly cited.

Mahshab Sheraz
[1] Advanced Nanomaterials & Textile Research Division, Korea Institute of Industrial Technology, Ansan-si, Gyeonggi-do, South Korea
[2] Hallym University, Chuncheon-si, Gangwon-do, South Korea

This study offers significant insights into the emission of nanoscale TiO_2 particles from the Gearbox Wivactive air purifier. The conducted experimental setups and measurements significantly enhance our comprehension of particle emissions in the context of indoor air purification. According to the results, the air purifier exhibits minimal particle emission rates and does not present substantial exposure hazards within the evaluated parameters. Overall, the paper is well designed and organized.

I would like to bring up a few points for consideration and propose a few improvements that would strengthen the study.

1. The introduction provides a good overview of photocatalytic oxidation for air purification. I would like to suggest including more contextual information on the current state of indoor air purification.

2. The study describes two distinct experimental configurations, Test 1 and Test 2, but it would be advantageous to provide a deeper explanation of the rationale behind each setup and the specific differences between them. In addition, the authors should explain why these particular configurations were selected and how they correspond to actual indoor conditions.

3. The sensitivity of the measurement instruments used in the study may have affected the ability to detect and quantify low particle concentrations accurately. This limitation should be addressed in future studies by employing more sensitive measurement techniques or instruments.

4. The authors mentioned that the release of TiO_2 nanoparticles was not quantified due to low release rates below the instruments' LOQ. It is important to discuss the implications of this limitation and the potential impact on the study's conclusions. Suggestions for improving sensitivity or alternative measurement methods could be provided.

5. This study mainly focuses on the emission potential of nanosized TiO_2 particles and their exposure under laboratory-simulated conditions. For future research, it is crucial to investigate the long-term exposure and effects in real-life indoor environments.

Overall, this study provides important insights into the release potential of nanosized TiO_2 particles from a commercial indoor air purifier. The authors conducted the experiments diligently and presented the results clearly.

Is the work clearly and accurately presented and does it cite the current literature?
Yes

Is the study design appropriate and does the work have academic merit?
Yes

Are sufficient details of methods and analysis provided to allow replication by others?
Partly

If applicable, is the statistical analysis and its interpretation appropriate?
Yes

Are all the source data underlying the results available to ensure full reproducibility?
Partly

Are the conclusions drawn adequately supported by the results?
Yes

Competing Interests: No competing interests were disclosed.

Reviewer Expertise: Indoor air pollution control and managment, Air purification, Photocatalysts, Synthesis of Metal-organic framework (MOFs) materials for air purification, and other environmental remdiations.

I confirm that I have read this submission and believe that I have an appropriate level of expertise to confirm that it is of an acceptable scientific standard.

Reviewer Report 29 July 2022

https://doi.org/10.21956/openreseurope.15956.r29678

© 2022 Djellabi R. This is an open access peer review report distributed under the terms of the Creative Commons Attribution License, which permits unrestricted use, distribution, and reproduction in any medium, provided the original work is properly cited.

Ridha Djellabi
Universitat Rovira i Virgili, Tarragona, Spain

The authors have studied the release of N-doped TiO2 from the photocatalytic reactor for air purification under reasonable worst-case operational conditions. The release of photocatalytic nanoparticles (NPs) from coating surface is one of the capital issues raised against the wide application of photocatalytic technology because of the toxicity caused by such NPs. The current study reported that there was no release of TiO2 NPs from the air purifier “Gearbox Wivactive”.

My comments are listed below:

- Does the authors synthesis N doped TiO2 at lab? It would be better to show the details of synthesis and characterization.
- The release rate of NPs is associated directly with the coating approach. Therefore, it would be nice to mention which kind of coating method was used, providing experimental details.
- In general, balancing between a good coating of NPs on surface and enhanced

photoactivity is a challenge. More details regarding the photocatalytic efficiency of Gearbox Wivactive purifier could be added.

Is the work clearly and accurately presented and does it cite the current literature?
Yes

Is the study design appropriate and does the work have academic merit?
Yes

Are sufficient details of methods and analysis provided to allow replication by others?
Partly

If applicable, is the statistical analysis and its interpretation appropriate?
Yes

Are all the source data underlying the results available to ensure full reproducibility?
Partly

Are the conclusions drawn adequately supported by the results?
Yes

Competing Interests: No competing interests were disclosed.

Reviewer Expertise: Photocatalysis

I confirm that I have read this submission and believe that I have an appropriate level of expertise to confirm that it is of an acceptable scientific standard.