Check for updates

METHOD ARTICLE

REVISED System-Based Protection Method for High-Voltage Pulse Generator Switching Units in Biomass Electroporation

[version 2; peer review: 1 approved, 3 not approved]

Alexander Golberg, Klimentiy Levkov

Department of Environmental Studies, Porter School of Environment and Earth Sciences, Tel Aviv University, Tel Aviv, Israel

v2 **First published:** 12 Oct 2023, **3**:171
https://doi.org/10.12688/openreseurope.16465.1
Latest published: 09 Jan 2024, **3**:171
https://doi.org/10.12688/openreseurope.16465.2

Abstract

Background

High-voltage pulsed electric field (PEF) technology has emerged as a promising technique for enhancing cell membrane permeabilization for biotechnological and medical applications. Given the parametric instability and low resistivity of biomass when used it as an electrical load, it is imperative for the switching unit to meet specific requirements in terms of load capacity and protection against overloads and short circuits.

Methods

To construct generators capable of producing high-voltage pulses in the microsecond and millisecond duration ranges, we are incorporating a switching unit that employs a hardware-software method to safeguard critical transistors against overloads and short-circuit currents. Our strategy revolves around utilizing the energy storage capacitor (ESC) both as a means of energy storage and as a current sensor. By monitoring the voltage drop during discharge, we can accurately estimate current parameters. The occurrence of an excessively rapid discharge from the ESC serves as an indicator of a short circuit. The microcontroller calculates ESC discharge limits based on preset parameters within a defined timeframe. Should this limit be exceeded, the system promptly interrupts to address the pulse responsible for the short circuit and halts the further supply of remaining pulses to the load. This sophisticated approach ensures the protection and integrity of the system in the face of potential overloads or short circuits.

Open Peer Review

Approval Status ✗ ✓ ✗ ✗

	1	2	3	4
version 2 (revision) 09 Jan 2024		✓ view		✗ view
version 1 12 Oct 2023	✗ view	✗ view	✗ view	

1. **Vitalij Novickij**, Vilnius Gediminas Technical University, Vilnius, Lithuania
2. **Jie Zhuang**, Suzhou Institute of Biomedical Engineering and Technology, Suzhou, China
University of Science and Technology of China, Hefei, China
3. **Rai Naveed Arshad**, Universiti Teknologi Malaysia, Skudai, Malaysia
4. **Roman Karki**, Nepal Agricultural Research Council, Kathmandu, Nepal

Any reports and responses or comments on the article can be found at the end of the article.

Results

Applying a systemic approach in the design of the presented implementation of protection for key transistors in the switching node from overload and short-circuit current for high-voltage pulse generators (HVPG) in the microsecond and millisecond duration ranges allows for a simpler circuit solution. In this case, the system approach also provides a unified control principle when implementing the considered option for organizing protection, regardless of the number and type of transistors or solid-state switching modules used and connected in parallel.

Conclusions

The configuration and protective circuitry presented in the article are specifically tailored for shielding switching elements from short-circuit currents, with a primary focus on their application in high-voltage pulse generators (HVPG). These generators are commonly employed in the high-voltage pulse treatment of diverse and unstable loads during the electroporation of biomass. The technical solution expounded in the article is intended for use in the switching nodes of HVPG, particularly those with discharge circuits constructed based on a direct capacitive discharge scheme. Notably, this protection configuration introduces local innovation and is characterized by the circuit's simplicity, achieved through the effective utilization of existing system resources. This protective variant for HVPG switches is particularly well-suited for devices utilized in versatile technological installations with relatively lower performance levels.

Keywords
electroporation, pulsed electric fields, pulsed field generators, failure protection, transistors



This article is included in the Horizon 2020 gateway.



This article is included in the Medical Biotechnology gateway.

Corresponding author: Alexander Golberg (agolberg@tauex.tau.ac.il)

Author roles: Golberg A: Conceptualization, Formal Analysis, Funding Acquisition, Investigation, Project Administration, Resources, Writing – Original Draft Preparation, Writing – Review & Editing; **Levkov K**: Conceptualization, Formal Analysis, Investigation, Methodology, Resources, Software, Validation, Visualization, Writing – Original Draft Preparation, Writing – Review & Editing

Competing interests: No competing interests were disclosed.

Grant information: This project has received funding from the ERA-NET under the European Union's Horizon 2020 research and innovation programme (grant agreement No 723770) EuroNanoMed III MATISSE project. The authors also acknowledge support form TAU Zimin Center for technologies for better life and Spark Tel Aviv.
The funders had no role in study design, data collection and analysis, decision to publish, or preparation of the manuscript.

Copyright: © 2024 Golberg A and Levkov K. This is an open access article distributed under the terms of the Creative Commons Attribution License, which permits unrestricted use, distribution, and reproduction in any medium, provided the original work is properly cited.

How to cite this article: Golberg A and Levkov K. **System-Based Protection Method for High-Voltage Pulse Generator Switching Units in Biomass Electroporation [version 2; peer review: 1 approved, 3 not approved]** Open Research Europe 2024, **3**:171 https://doi.org/10.12688/openreseurope.16465.2

First published: 12 Oct 2023, **3**:171 https://doi.org/10.12688/openreseurope.16465.1

REVISED **Amendments from Version 1**

In the amended paper we specified that the solution we provide for circuit protection is not general for all ranges of high voltage pulsed electric fields. The solution described fits for micro to milli second duration pulses in laboratory and industrial systems. For nano-second duration pulses other alternatives exist. In addition, we explain that the goal was to provide a protection for the generator itself without relation to the external applicators, which can be different from system to system. The literature list was updated.

Any further responses from the reviewers can be found at the end of the article

Introduction

High-voltage pulse generators play a crucial role in biomass electroporation and pulsed electric field processing, enabling efficient accumulation, compression, and transfer of high-power impulse electrical energy for biomass processing[1]. Biomass electroporation involves the application of high-voltage pulses to disrupt cell membranes, facilitating the release of liquid fractions or extraction of valuable components from the biomass[1]. This technique significantly improves the efficiency of traditional biomass processing methods[1].

Electroporation technologies find numerous applications across diverse industries, including the food sector, biotechnology, energy, and medicine. In addition to their use in electroporation devices, high-voltage pulse generators play a pivotal role in a wide range of experiments and applications, spanning elementary particle physics, X-ray technology, radar systems, laser technology, thermonuclear fusion, simulation of nuclear explosions, materials processing and crushing, medicine, ecology, and the food industry.

Regardless of the mechanical design of the executive devices, which are adapted to different electroporation technologies and biomass types, high-voltage pulse generators are important components of all devices for its electroporation[2]. There are various methods for generating high-voltage pulses and corresponding principles of the structural design of HVPG (High-Voltage Pulse Generators). The structure of HVPG depends on the purpose of these devices and the parameters of the pulses they generate. The design of the end devices connected to the output of HVPG, the length and parameters of the interface, as well as the characteristics of the electroporated biomass, determine the choice of the range of generated pulses. For example, devices that generate pulses in the microsecond and millisecond duration range significantly differ in their construction and component base from devices in the nanosecond range. The HVPGs we develop and use generate pulses with durations ranging from 10 to 100 microseconds for electroporating biomass and from 1 to 20 milliseconds for its extraction. Typically, the structural design of this type of HVPG utilizes the direct capacitive discharge method.

However, when high-voltage pulse generators are employed for biomass electroporation, specific conditions arise that necessitate special precautions for safeguarding the key transistors within the switching unit against short-circuit currents.

HVPGs that implement direct capacitive discharge usually contain energy storage elements, switching nodes for pulsed discharge, voltage and current measurement nodes, and pulse generation control nodes[3–5]. The discharge circuit consists of a storage capacitor (ESC), a switching node and a load connected in series[3,4]. Specialized capacitors serve as energy storage devices in most high-voltage pulse generators, accompanied by high-voltage sources featuring low internal resistance for pulsed discharges[3,4]. The switching node, controlled by a microcontroller, facilitates the short-term discharge of the energy-storage capacitor to the load[5,6]. The load in high-voltage pulse generators encompasses various types of plant and animal biomass, each exhibiting different conductivity values influenced by factors like moisture content and electrolytic properties[1]. As an electrical load, biomass in most cases is low-resistance, which determines the pulse currents in the range from hundreds to thousands of amperes when connected to a high voltage source[7–10].

The switching node, a vital component within the discharge circuit, significantly impacts the technical characteristics of the pulse generator[5,6,11]. These characteristics include maximum voltage and current values, pulse duration, pulse fronts steepness, pulse repetition frequency, and protection against overloads and short circuit currents. By generating quasi-rectangular pulses, the switching node directly influences the biomass by producing rectangular voltage and current pulses with exponential decay. Given the parametric instability and low resistivity of biomass as an electrical load[7,8,12–14], the switching unit must meet specific requirements for load capacity and protection against overloads and short circuits[15].

The purpose of the development presented in the article is to present a comprehensive method for protecting switching nodes from overload and short-circuit currents by maximizing the utilization of existing hardware and software resources in HVPG, utilizing a structure built on the direct capacitive discharge scheme. Traditional approaches for safeguarding key transistors against overload include inertial fuses, thermal circuit breakers, current limiters, and specialized modules with temperature sensors[6,11,16–29]. However, the implementation of these methods typically requires additional circuit elements and modules, resulting in increased complexity and cost. In contrast, the system-based method proposed in this work offers a more versatile, cost-effective, and flexible solution by leveraging the existing system resources.

This eliminates the need for specialized components and modules by increasing the functional load of existing HVPG hardware elements and its microcontroller software. Among the existing methods, the most effective approach involves the use of specialized drivers that integrate the switching functions and protection against short circuit currents for key transistors. However, it should be noted that these specialized drivers may not serve as a universal solution for short circuit protection in

all applications. Their usage is preferable in switching nodes designed for constant and stable loads. There are also limitations regarding the available product range, maximum current and voltage parameters, as well as the complexity of circuit adaptation to work with parallel transistor assemblies and switching modules without suitable protection. The technical solution presented in this article represents an implementation of an alternative method for protecting HVPG universal switching nodes from overload and short-circuit currents by optimizing the use of existing hardware resources and microcontroller software.

This technical solution possesses local novelty and relative simplicity of execution. This protection method can be applied in the development of HVPG switching nodes designed for use in electroporation installations for processing various types of biomass. Such versatile technological installations may be in demand, for example, in small and medium-sized agricultural associations for the disposal of various types of waste (stalks, spoiled and unsuitable vegetables and fruits), as well as for conducting experiments in research into electroporation processes of a wide variety of biomass.

Results and discussion

Ensuring protection of key transistors from overload

Metal oxide semiconductor field effect transistors (MOSFET), insulated gate bipolar transistors (IGBT), and silicon carbide (SiC) transistors are the main types of transistors used in switching nodes. These transistors are sensitive to overloads and short circuit currents, which can lead to their failure if not adequately protected.

Failure typically occurs when these transistors overheat above 150°C or when they exceed the maximum impulse collector current (ICM), which operates for a very short but excessive duration for this type of transistor. Consequently, reliable protection mechanisms are essential during emergency conditions.

The methods and implementation of protection are determined by the requirements of the Safe Operating Area (SOA) specific to each transistor type. The protective hardware or system must promptly detect any deviations from normal operation, limit current overload conditions, and transition the transistors to a non-conducting state in the event of a short circuit.

It is important to distinguish between an overload condition (OC), where the current does not exceed twice the permissible operating value, and a short circuit current (SC), where the current can exceed the permissible value by several times or more.

Unlike short-circuit currents, overload currents do not cause immediate failure of the key transistors. The overload mode is characterized by a relatively gradual temperature increase in the transistors. This is due to the nature of high-voltage pulsed action on biomass, where the maximum pulse current (I_{max}) gradually increases as a function of the number of pulses (N) applied to the electroporated biomass (Imax = f(N)). Without proper limitation of the power dissipated by the key transistors, this temperature increase can reach critical levels.

The critical temperature limit is determined by the maximum allowable power (P_{tm}) that can be dissipated by the key transistors. This power value is determined either through computational methods or experimental analysis and depends on the specific transistor type and cooling conditions.

Limiting the rise in temperature of key transistors, when it occurs due to excessive power dissipated on them, is possible with the help of software control of the pulse repetition rate. To implement this regulation, the current value of the power dissipated by the key transistors is continuously calculated during the interval between pulses. This power dissipation is a component of the total power dissipated in the discharge circuit.

The total power dissipated (P_{DC}) in the discharge circuit during electroporation is determined every second as the sum of the energy released during this time by all pulses applied to the electroporated biomass as shown in Equation 1:

$$P_{DC} = \sum_{i=1}^{N} Wi \quad (1)$$

Where N is the number of pulses delivered in 1 sec and W_i is the energy dissipated in the discharge circuit by one pulse defined in Equation 2:

$$W_i = 0.5 \cdot C_{ESC} \cdot (U_{IV}^2 - U_{RV}^2) \quad (2)$$

where C_{ESC} is the ESC capacitance,

U_{IV} is the initialization voltage value (initial voltage of the pulse),

U_{RV} is the residual voltage of the pulse.

This calculation requires a voltage measurement across the ESC before (U_{IV}) and after (U_{RV}) each pulse.

During the pulse action, it is important to note that the ESC does not get charged.

The total power dissipated during the discharge is determined by the expression shown in Equation 3:

$$P_{DC} = \sum_{i=1}^{N} Wi = [0.5 \cdot C_{ESC} \cdot (U_{IV}^2 - U_{RV}^2)] \cdot F \quad (3)$$

where F is the pulse repetition frequency.

The total resistance of the discharge circuit is calculated after each pulse using the following Equation 4

$$R_{DC} = t_i / [(C_{ESC} \cdot \ln(U_{IV} / U_{RV})] \quad (4)$$

where t_i is the pulse duration.

The total resistance of the discharge circuit, Equation 5, is the sum of the biomass resistance (R_{BM}), of resistance equalization resistors (R_{ER}) and resistance of fully conductive key transistors (R_{KT}).

$$R_{DC} = R_{BM} + R_{ER} + R_{KT} \quad (5)$$

In this case, the power dissipated by the key transistors (P_{KT}), Equation 6, is proportional to the ratio of the resistance of fully conducting and parallel-connected key transistors (R_{KT}) to the total resistance of the discharge circuit (R_{DC}).

$$P_{KT} = P_{DC} \cdot (R_{KT} / R_{DC}) \quad (6)$$

If the power dissipated by the switching key transistors (P_{KT}) exceeds the maximum allowable power dissipation (P_{tm}), the pulse repetition frequency (F) is decreased according to Equation 7:

$$F_n = F_{n-1} \cdot [1 - (P_{KT} - P_{tm}) / P_{tm}] \quad (7)$$

The pulse repetition frequency is chosen as a regulating factor for the parametric response to overload of the key transistors. This choice is based on two main considerations. First, linear dependence: The dissipated power in the key transistors exhibits a linear relationship with the pulse repetition frequency. By decreasing the pulse repetition frequency, the power dissipation can be effectively reduced. This linear dependence allows for a straightforward and predictable adjustment of the system to manage the power dissipation within acceptable limits. Second: minimal impact on biomass electroporation qualitative indicators: Among the various parameters involved in the electroporation process, the pulse repetition frequency has been observed to have a lesser impact on the qualitative indicators of electroporation. This means that adjusting the pulse repetition frequency to address the overload of key transistors does not significantly compromise the overall effectiveness and quality of the electroporation process. Therefore, it can be considered a suitable parameter for regulation without compromising the desired outcome. Thus, by incorporating the pulse repetition frequency as a control parameter, it is possible to maintain the safe operation of the key transistors by effectively managing their power dissipation levels, while ensuring the overall success and quality of the electroporation process.

It should be noted that microcontroller-controlled variability of the pulse repetition frequency as a regulating factor in the parametric response to overload of key transistors is necessary, first of all, for universal devices that are used for electroporation of various types of biomass and for which performance is not a critical parameter. Such devices are used in small agricultural associations for the disposal of production waste (tops or substandard fruits and vegetables, for example), as well as for the disposal of relatively small volumes of waste from food industry enterprises. Performance, as a determining parameter, is also not important for laboratory devices. Microcontroller-controlled pulse repetition rate variability is less necessary when using HVPG for a single biomass species with predictable conductivity. Such devices are used for large industries where productivity is a critical indicator (sugar beet processing, for example).

Ensuring protection of key transistors from short circuit current

In addition to its higher amplitude compared to overload currents, the short-circuit current stands out for its sudden and unpredictable nature. This current determines the unacceptably high power dissipated on the key transistors, which leads to their failure. Therefore, the development of a switching node with effective protection against short-circuit currents is a critical stage in the design of a high-voltage pulse generator.

The process of building a switching node involves developing methods, electrical circuits, and selecting components that provide protection for key transistors against potential short-circuit currents. These currents can occur during electrical breakdown of biomass, during accidental direct contact of a movable electrode with a stationary one in a press electrode device, or when a metal particle enters the interelectrode space in flow electroporation devices.

There are autonomous and systemic methods for protecting key transistors from short-circuit currents. The autonomous method involves using specialized drivers for IGBT transistors with an additional protective function. These drivers are designed to terminate the short-circuit mode within a duration of 1 to 10 microseconds. The transistor, controlled by such a driver, must withstand the short-circuit current during this period.

In drivers with short-circuit protection, there is a dedicated Current Sense Input (CS) that is connected to either the current measuring resistor (referred as RSENSE) in the emitter circuit or the collector of the transistor, using additional resistive-capacitive measuring circuits. In the first case, the driver monitors the transistor's current, while in the second case, it monitors the transistor's saturation voltage. If the current exceeds the acceptable limit, the driver switches the transistor to a non-conducting state. The protection is disabled when the input signal is removed.

The advantages of using short-circuit current protection with specialized drivers include: 1) improved efficiency of the switching node by using low-resistance RSENSE resistors in the emitter circuits or eliminating them altogether with saturation current control, and 2) relative simplicity in implementing the protection circuit, as it only requires one active element - the driver.

However, there are some disadvantages to consider when using specialized drivers in biomass electroporation devices: 1) difficulties in selecting RSENSE measuring resistors suitable for high load currents and short circuits currents, 2) challenges in choosing drivers due to their compatibility with specific transistor parameters, 3) parametric load instability and current surges that may hinder accurate detection of the short-circuit mode by the driver, 4) limited availability of drivers with a wide range of parameters suitable for devices operating at voltages over 1000 Volts, 5) lack of a built-in function to trigger an output signal from the driver to halt the microcontroller's control pulses in the event of a short circuit, and 6) complexity of application when parallel connection of key transistors is required or the use of specialized switching modules with no short circuit protection.

The systemic method of short circuit protection offers an alternative approach to the autonomous method by primarily utilizing existing hardware as system resources for this purpose.

When dealing with a low-resistance and unstable load, such as biomass, the first challenge to address is the delineation of the maximum load and short circuit modes. The discharge of high-voltage energy from an energy-storage capacitor to a low-resistance load creates a blurred boundary when distinguishing between these two modes. This issue is further complicated by the occurrence of current surges in most cases, as illustrated in Figure 1. These surges result from the resonance of reactive components within the discharge circuits. In fact, the magnitude of the current surge can exceed two or more times the maximum value of the pulse itself.

Determining the boundary between maximum load current and short circuit current is a crucial task in developing switching nodes for high-voltage pulse generators. This boundary depends on two key factors. Firstly, it is determined by the maximum permissible current for the selected key transistors' semiconductor structure, considering the allowable duration of this current. Secondly, the boundary is influenced by the discharge level of the energy storage capacitor (ESC) during the pulse duration. In the event of a short circuit, which typically occurs when a subsequent pulse is applied to the load, there is a sudden and excessively rapid drop in the charging voltage of the ESC. This mode of operation can be problematic and needs to be addressed to ensure safe and reliable performance.

During normal operation, it is acceptable for the initialization voltage on the energy storage capacitor (ESC) to decrease by up to 37% during the specified duration of one pulse. However, if the voltage drop on the ESC exceeds 37% of the initialization voltage when the current pulse is applied, it

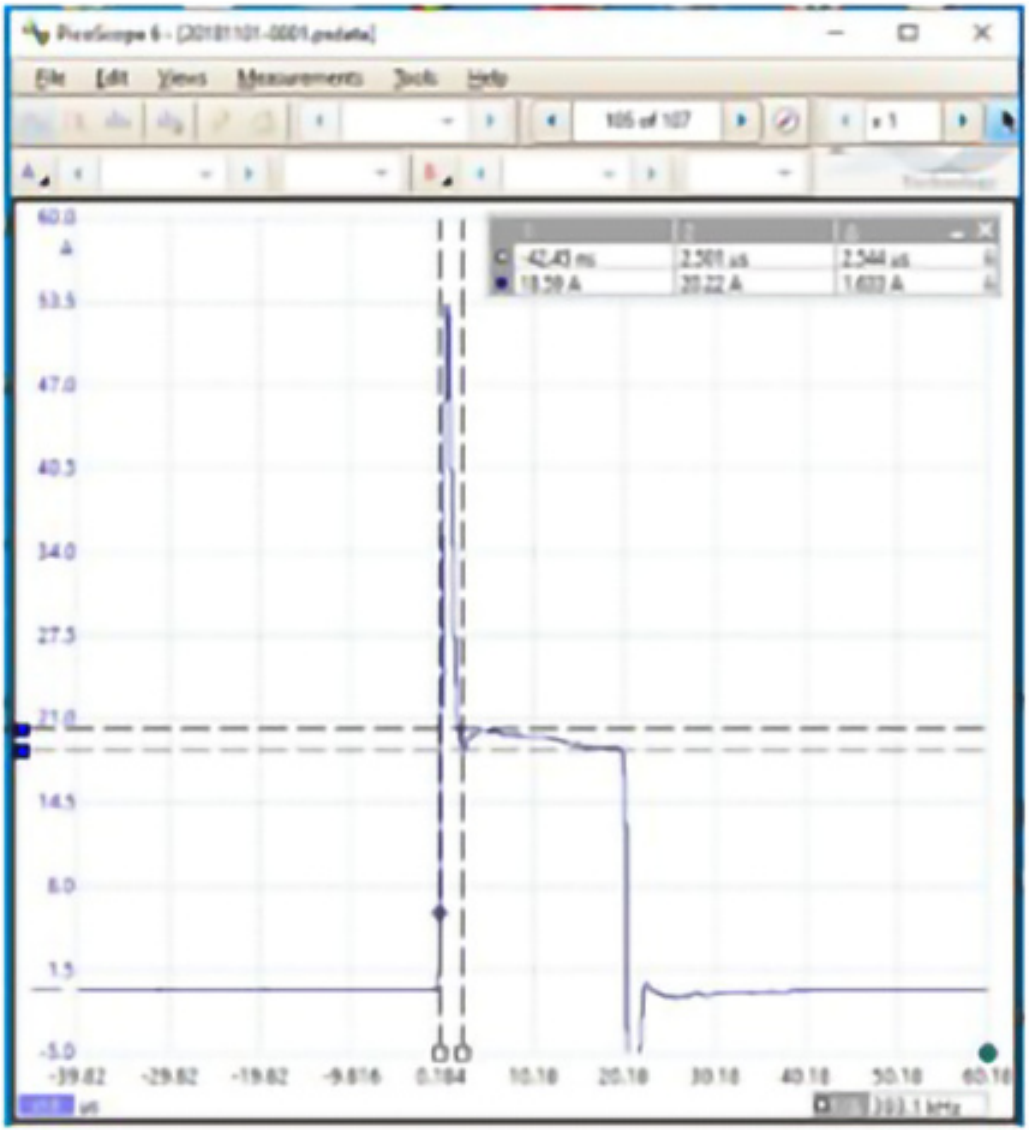

Figure 1. Sample current form for a single pulse during electroporation of a low-resistance green seaweed *Ulva* sp. biomass[8,14].

indicates an abnormal condition. In such cases, it is necessary to terminate the action of the current and subsequent pulses to prevent any potential damage or failure. The determination of this boundary can be achieved through a combination of hardware and software measures. By implementing appropriate hardware design, such as selecting key transistors with suitable current ratings and incorporating protective components, the maximum load current and short circuit current can be effectively managed. Furthermore, software algorithms can be developed to continuously monitor the voltage drop on the ESC during pulse application the termination of the current and subsequent pulses is carried out.

In Figure 2, we present an illustrative circuit diagram of a switching node that we have designed. This circuit incorporates a safeguard mechanism against short-circuit currents. What sets it apart from commonly employed schematics for building similar nodes is the incorporation of supplementary elements, namely the COMP comparator and the low-power MOSFET transistor Q3.

The developed switching node is based on a schematic that incorporates two key IGBT transistors, Q1 and Q2, connected in parallel with equalization resistors (Req1, Req2) in their emitter circuits. Both transistors are connected to the load, labeled as "LOAD," through these equalization resistors. The series connection of the energy-storage capacitor (ESC), key transistors, equalization resistors, and the load forms the discharge circuit. The control of the key transistors is achieved using the key transistor driver, denoted as "KT DRIVER," with special connection circuits connecting its output to the gates of the controlled transistors.

Power for the driver and its circuits is provided by an isolating DC-DC converter called the "DC-DC CONVERTER." The voltage on the ESC is measured using a voltage divider labeled as "HV DEVIDER." The voltage measured at the ESC output of the divider is then fed to the analog-to-digital converter of the microcontroller for ADC conversion, evaluation, storage, and display purposes. Additionally, the measured voltage from the divider output is used as a negative feedback factor for regulating the ESC charging unit, labeled as "ESC CHARGING UNIT," and is also fed directly to the input of the comparator, labeled as "COMPARATOR," for qualitative assessment of the voltage drop level on the ESC. The inverted input of the comparator is connected to the microcontroller's digital-to-analog converter (DAC) output, where a comparison voltage is set to represent the permissible boundary level of voltage drop on the ESC.

Control pulses for key transistors Q1 and Q2 are generated by the microcontroller and supplied to the input of the driver "KT DRIVER" through one of its digital outputs.

When the load current is within the permissible range, transistor switch Q3 remains conductive and allows the control pulses to pass through.

The essence of the current protection, as proposed in this schematic, is that in the event of a short circuit, the control pulse from the microcontroller is interrupted by transitioning the key Q3 to a non-conductive state.

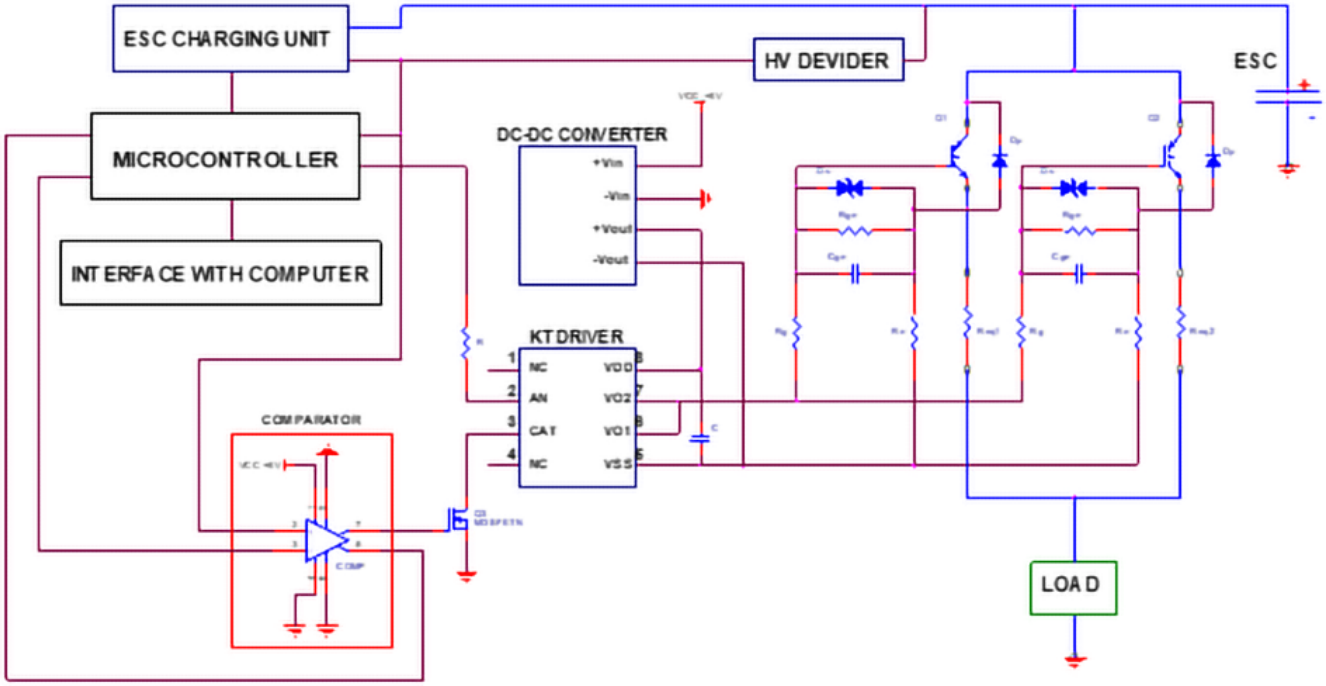

Figure 2. The electrical circuit diagram of the switching node with its implemented system protection against short-circuit current.

The conductivity of the Q3 key is controlled by the comparator "COMPARATOR", the output of which is connected to the gate of the Q3 key. When pulses are applied to an allowable load, the charge voltage drop across the ESC (called the initialization voltage) must not exceed a predetermined limit, which is calculated by the microcontroller. The microcontroller calculates the value of the initialization voltage drop based on the specified values of this voltage, the pulse duration and the minimum allowable resistance of the discharge circuit.

The minimum allowable resistance value (R_{DC}, Equation 8) of the discharge circuit is determined by the ratio of the maximum initialization voltage ($U_{IV} = U_{max}$) to the maximum allowable pulse current (I_{max}):

$$R_{DC} = U_{max} / I_{max} \quad (8)$$

The result of this calculation is the value of the residual voltage, which is set as a comparison signal by the microcontroller at the inverse input of the comarator "COMPARATOR".

The microcontroller calculates the voltage of the comparison signal in accordance with the Equation 9:

$$U_{RV} = U_{IV} \cdot \mathrm{Exp}(-t_i / R_{DC} \cdot C_{ESC}) \quad (9)$$

If the voltage on the energy-storage capacitor (ESC) remains above the permissible residual level before the completion of any pulse, the voltage at the direct input of the comparator will be higher compared to the inverse input. Therefore, the direct output of the comparator labeled "COMPARATOR" will be logic high level, which determines the conductive state of switch Q3. In this case, the sequence of control pulses coming to the input of the KT DRIVER driver from the microcontroller will continue without interruption.

However, if the voltage drops below the permissible residual level during the time interval of the acting pulse, the voltage at the direct input of the comparator will be lower than at the inverse input. As a result, the direct output of the comparator switches to a low logic level. This causes switch Q3 to enter a non-conductive state, interrupting the supply of the acting pulse before its completion. Simultaneously, a high-level signal is sent from the inverse output of the comparator to the corresponding digital input of the microcontroller. The microcontroller, based on its program, responds to this signal by stopping the process of supplying the given sequence of pulses.

According to the diagram in Figure 2, the maximum conductivity of the switching node is achieved through the parallel connection of the resistances of both key transistors (Q1, Q2) operating in saturation mode, as well as the parallel connection of the balancing resistors (Req1, Req2) in their emitter circuits.

For this circuit, the total resistance ($R_{CN,}$ Equation 10) of the switching node will be

$$R_{CN} = 0.5 \cdot R_{KT} + 0.5 \cdot R_{eq1,2} \quad (10)$$

Then the maximum short circuit current (I_{SC}) at the maximum initialization voltage

($U_0 = U_{max}$) is defined in Equation 11:

$$I_{SC} = U_{IV} / R_{CN} \quad (11)$$

During the time of the current pulse t_i, in the event of a short-circuit current, an exponential discharge of the energy storage capacitor of the ESC will occur due to the resistance R_{CN} to the value of the residual voltage U_{RV} in accordance with the Equation 12:

$$U_{RV} = U_{IV} \cdot \mathrm{Exp}(-t_i / R_{CN} \cdot C_{ESC}) \quad (12)$$

When implementing a switching node based on the diagram shown in Figure 2, the reaction time of the protection system in the event of a short-circuit current is determined by following factors:

1) ESC discharge time to the set value of the residual voltage when a acting pulse is applied in in case of a short circuit in the load circuit (t_{DS}),

2) comparator response time (t_{CR}),

3) driver response time (t_{DR}),

4) turn-off time of transistor Q3 ($Q3_t_{d(off)}$),

5) turn-off time of transistors Q1 and Q2 ($Q1\|Q2_t_{d(off)}$),

Relatively the longest is the discharge time of the ESC to the set value of the residual voltage when a pulse is feed in the event of a short circuit in the load circuit (t_{DS}).

This time is determined by the resistance of the switching node in the fully conducting state of its key transistors (R_{CN}), the ESC capacitance value (C_{ESC}) and the ESC charge voltage value (U_{IV}).

This time, in accordance with Equation 13, is determined by the switch node resistance (R_{CN}) in the fully conductive state of its key transistors, the ESC capacitance value (C_{ESC}) and the ESC charge voltage value (U_{IV}).

$$t_{DS} = R_{CN} \cdot C_{ESC} \cdot \ln(U_{IV} / U_{RV}) \quad (13)$$

The comparator response time (t_{CR}) refers to the time it takes for the comparator to detect a voltage drop below an acceptable residual level and to switch its output logic level accordingly. The response time depends on the design and characteristics of the comparator used in the circuit. The driver response time (t_{DR}) is the time it takes for the key transistors driver (KT DRIVER) to respond to the signal from the comparator and transistor switch Q3 to turn the commutator's switches Q1 and Q2 into a non-conductive state. The response time of a driver is determined by its design and internal circuitry.

The turn-off time of transistor Q3 ($Q3_t_{d(off)}$) is the time it takes for switch Q3 to go from conducting to non-conducting after receiving a signal from the comparator.

The turn-off time is determined by the corresponding parameter (td(off)) of transistor Q3.

The turn off time of transistors Q1 and Q2 ($Q1\|Q2_t_{d(off)}$) is the time it takes for them to go from conducting to non-conducting after receiving a signal from the driver. The turn-off time is determined by the corresponding parameter ($t_{d(off)}$) of these transistors.

Along with the circuit design, the choice of components when designing the switching unit should ensure the minimum possible delay time for the protection to operate when a short-circuit current occurs.

The maximum short-circuit current pulse duration (t_{PD}) is determined (Equation 14) by the sum of the response times of the circuit elements providing short-circuit protection:

$$t_{PD} = t_{DS} + t_{CR} + t_{DR} + Q3_t_{d(off)} + Q1\|Q2_t_{d(off)} \qquad (14)$$

With the practical implementation of this option of protection against short-circuit current, the system response time to the occurrence of this mode is no more than 10 microseconds, which does not lead to failure of key transistors. The system method of short circuit protection is practically uncontested when using high-voltage switching modules that do not have appropriate protection (switching module HTS 61-240-SI, for example).

Circuit implementation of this method of protecting switching modules from short-circuit currents is shown in Figure 3. The system organization of protection against short-circuit currents also applies to the ESC used in this case.

The construction principle of this protection method resembles the structure used when employing a single transistor switch or parallel connection of transistor keys. In cases where high installation voltages (exceeding 1000 Volts) are involved, a powerful, low-resistance, non-inductive current-limiting resistor called the "CURRENT LIMITING RESISTOR" is incorporated into the circuit. This resistor serves to attenuate over currents during short circuit conditions.

Referring to the schematic solution shown in Figure 2, when there is a significant and excessively rapid discharge of the energy storage capacitor (ESC), which is detected by the comparator, the subsequent pulses from the microcontroller to the control input of the switching module are halted. To control the supply of control pulses to this input from the microcontroller, the logical element "AND" (U1A) is utilized. It enables or disables the delivery of control pulses to the control input of the module.

Conclusions

This article presents practical solutions for protecting key transistors from overloads and short-circuit currents in the switching nodes of high-voltage pulse generators with

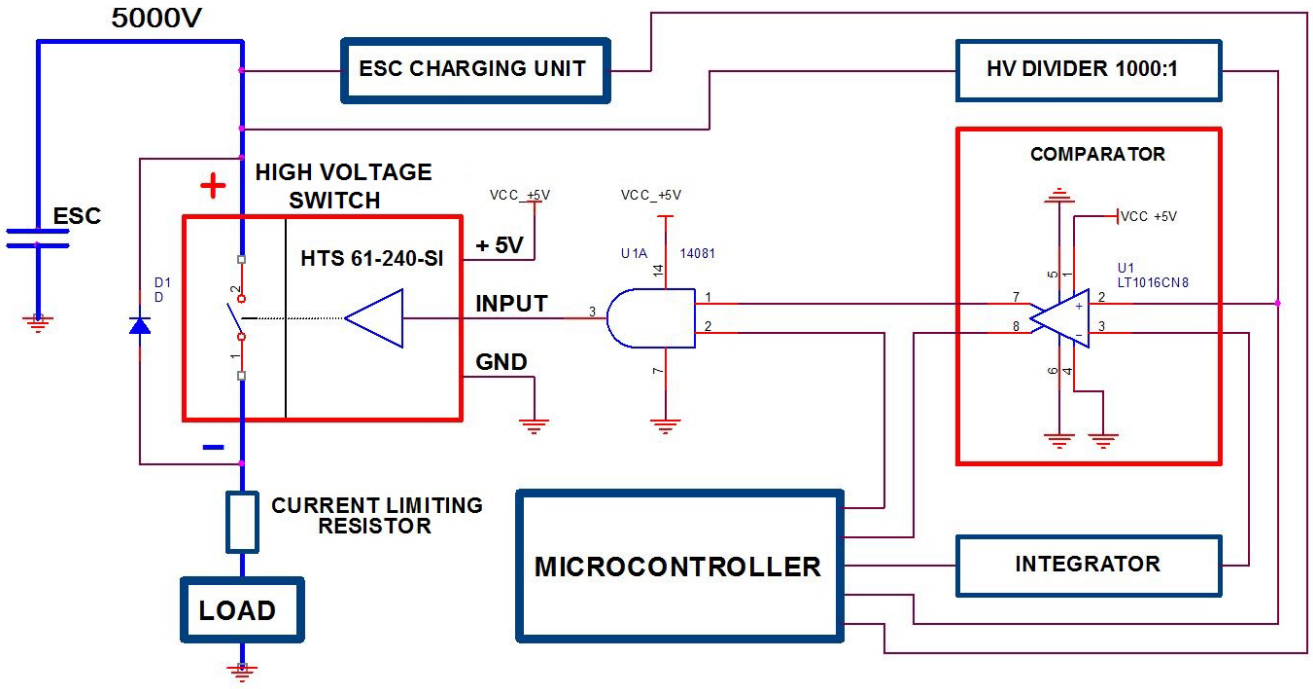

Figure 3. An example of a circuit for protecting a switching module from short-circuit currents using a system method.

microsecond and millisecond pulse durations ranges. The significance of this research stems from the fact that the performance parameters of the switching node greatly influence the technical characteristics of the entire device. Ensuring the reliability of the pulse generator is of utmost importance, and this heavily depends on effectively safeguarding the elements of the discharge circuit against overload and short-circuit currents. The article showcases a systems-based approach for overload protection and demonstrates a hardware-software implementation for safeguarding against short-circuit currents. These methods exemplify a system integration of internal protective functions within the pulse generator. The options for protecting switching nodes presented in the article help to increase the reliability of high-voltage pulse generators of microsecond and millisecond pulse duration ranges with direct capacitive discharge circuitry.

Data availability

There is no data associated with this article.

Acknowledgments

The authors thank the TAU SPARK fund, TAU Zimin Center for technologies for better life and the EuroNanoMed 3 ERA-Net Cofund Action on Nanomedicine under Horizon 2020 MATISSE project for their support of this project.

References

1. Golberg A, Sack M, Teissie J, *et al.*: **Energy-Efficient Biomass Processing with Pulsed Electric Fields for Bioeconomy and Sustainable Development.** *Biotechnol Biofuels.* 2016; **9**: 94.
PubMed Abstract | Publisher Full Text | Free Full Text
2. Reberšek M, Miklavcic D, Bertacchini C, *et al.*: **Cell membrane electroporation-Part 3: the equipment.** *IEEE Electrical Insulation Magazine.* 2014; **30**(3): 8–18.
Publisher Full Text
3. Robinson FVP: **Power electronics converters, applications and design.** *Microelectronics J.* 1997; **28**.
4. Baliga BJ: **Fundamentals of power semiconductor devices.** 2008.
Publisher Full Text
5. Volke A: **IGBT Modules: Technologies, Driver and Application.** *Infineon Technologies AG.* 2014.
6. Yin S, Wu Y, Liu Y, *et al.*: **Comparative design of gate drivers with short-circuit protection scheme for SiC MOSFET and Si IGBT.** *Energies.* 2019; **12**(23): 4546.
Publisher Full Text
7. Levkov K, Vitkin E, González CA, *et al.*: **A Laboratory IGBT-Based High-voltage Pulsed Electric Field Generator for Effective Water Diffusivity Enhancement in Chicken Meat.** *Food Bioproc Tech.* 2019; **12**: 1993–2003.
Publisher Full Text
8. Prabhu MS, Levkov K, Livney YD, *et al.*: **High-Voltage Pulsed Electric Field Preprocessing Enhances Extraction of Starch, Proteins, and Ash from Marine Macroalgae *Ulva ohnoi*.** *ACS Sustain Chem Eng.* 2019; **7**: 20.
Publisher Full Text
9. Prabhu M, Levkov K, Levin O, *et al.*: **Energy efficient dewatering of far offshore grown green macroalgae *Ulva* sp. biomass with pulsed electric fields and mechanical press.** *Bioresour Technol.* 2020; **295**: 122229.
PubMed Abstract | Publisher Full Text
10. Yu X, Gouyo T, Grimi N, *et al.*: **Pulsed electric field pretreatment of rapeseed green biomass (stems) to enhance pressing and extractives recovery.** *Bioresour Technol.* 2016; **199**: 194–201.
PubMed Abstract | Publisher Full Text
11. Mocevic S, Wang J, Burgos R, *et al.*: **Comparison and Discussion on Shortcircuit Protections for Silicon-Carbide MOSFET Modules: Desaturation Versus Rogowski Switch-Current Sensor.** In: *IEEE Trans Ind Appl.* 2020; **56**(3): 2880–2893.
Publisher Full Text
12. Polikovsky M, Fernand F, Sack M, *et al.*: **Towards marine biorefineries: Selective proteins extractions from marine macroalgae *Ulva* with pulsed electric fields.** *Innov Food Sci Emerg Technol.* 2016; **37**: 194–200.
Publisher Full Text
13. Ghosh S, Gillis A, Levkov K, *et al.*: **Saving energy on meat air convection drying with pulsed electric field coupled to mechanical press water removal.** *Innov Food Sci Emerg Technol.* 2020; **66**: 102509.
Publisher Full Text
14. Levkov K, Linzon Y, Mercadal B, *et al.*: **High-voltage pulsed electric field laboratory device with asymmetric voltage multiplier for marine macroalgae electroporation.** *Innov Food Sci Emerg Technol.* 2020; **60**: 102288.
Publisher Full Text
15. Levkov K, Golberg A: **Asymmetric voltage multiplying circuit coupled to sliding electrodes for biomass fractionation with high-voltage and high current pulsed electric fields.** *Technology (Singap World Sci).* 2020; **8**(1): 15–26.
Publisher Full Text
16. Yuasa K, Nakamichi S, Omura I: **Ultra high speed short circuit protection for IGBT with gate charge sensing.** In: *Proceedings of the International Symposium on Power Semiconductor Devices and ICs.* 2010.
Reference Source
17. Tanimura T, Yuasa K, Omura I: **Full digital short circuit protection for advanced IGBTs.** In: *Proceedings of the International Symposium on Power Semiconductor Devices and ICs.* 2011.
Publisher Full Text
18. Horiguchi T, Kinouchi SI, Nakayama Y, *et al.*: **A fast short-circuit protection method using gate charge characteristics of SiC MOSFETs.** In: *2015 IEEE Energy Conversion Congress and Exposition, ECCE 2015.* 2015.
Publisher Full Text
19. Kim MS, Park BG, Kim RY, *et al.*: **A novel fault detection circuit for short-circuit faults of IGBT.** In: *Conf Proc (IEEE Appl Power Electron Conf Expo).* 2011.
Publisher Full Text
20. Park BG, Lee JB, Hyun DS: **A novel short-circuit detecting scheme using turn-on switching characteristic of IGBT.** In: *Conference Record - IAS Annual Meeting (IEEE Industry Applications Society).* 2008.
Publisher Full Text
21. Chen Y, Li W, Iannuzzo F, *et al.*: **Investigation and classification of short-circuit failure modes based on three-dimensional safe operating area for high-power IGBT modules.** *IEEE Trans Power Electron.* 2018; **33**(2): 1075–1086.
Publisher Full Text
22. Lutz J, Döbler R, Mari J, *et al.*: **Short circuit III in high power IGBTs.** In: *2009 13th European Conference on Power Electronics and Applications, EPE '09.* 2009.
Reference Source
23. Kumar A, Bhattacharya S, Baliga J, *et al.*: **An experimental study of short circuit behavior and protection of 15 kV SiC IGBTs.** In: *2019 IEEE 7th Workshop on Wide Bandgap Power Devices and Applications, WiPDA 2019.* 2019.
Publisher Full Text
24. Wang Z, Shi X, Xue Y, *et al.*: **Design and performance evaluation of overcurrent protection schemes for silicon carbide (SiC) power MOSFETs.** *IEEE Trans Ind Electron.* 2014; **61**(10): 5570–5581.
Publisher Full Text
25. Sadik DP, Colmenares J, Tolstoy G, *et al.*: **Short-Circuit Protection Circuits for Silicon-Carbide Power Transistors.** *IEEE Trans Ind Electron.* 2016; **63**(4): 1995–2004.
Publisher Full Text
26. Li X, Xu D, Zhu H, *et al.*: **Indirect IGBT Over-Current Detection Technique Via Gate Voltage Monitoring and Analysis.** *IEEE Trans Power Electron.* 2019; **34**(4): 3615–3622.
Publisher Full Text
27. Meng Z, Yang Y, Gao Y, *et al.*: **A Novel I_c Measurement without Blanking Time for Short-Circuit Protection of High-Power IPM.** *IEEE Access.* 2020; **8**: 64475–64485.
Publisher Full Text
28. Gerber D, Guillod T, Leutwyler R, *et al.*: **Gate unit with improved short-circuit detection and turn-off capability for 4.5-kv press-pack igbts operated at 4-ka pulse current.** *IEEE Trans Plasma Sci.* 2013; **41**(10): 2641–2648.
Publisher Full Text
29. Huang X, Li X, Wang F, *et al.*: **Short circuit detection and driving control with no blanking time for high voltage high power insulated gate bipolar transistors.** *IET Power Electronics.* 2021; **14**(6): 1138–1148.
Publisher Full Text

Open Peer Review

Current Peer Review Status: ✗ ✓ ✗ ✗

Version 2

Reviewer Report 10 May 2024

https://doi.org/10.21956/openreseurope.18249.r39301

© **2024 Karki R.** This is an open access peer review report distributed under the terms of the Creative Commons Attribution License, which permits unrestricted use, distribution, and reproduction in any medium, provided the original work is properly cited.

✗ **Roman Karki**
Nepal Agricultural Research Council, Kathmandu, Central Development Region, Nepal

Response to the Editor:
High-voltage pulsed electric field (PEF) technology is being explored for enhancing cell membrane permeability in various fields. Ensuring the safety of equipment, especially the switching unit, is crucial due to the instability of biomass as an electrical load. The authors have devised a method using hardware and software to protect critical transistors from overloads and short circuits. By monitoring the voltage drop across an energy storage capacitor (ESC), they proposed that they can estimate current parameters and detect short circuits; If a rapid discharge indicates a short circuit, the system interrupts to prevent further damage. According to them, this approach safeguards the system during potential overloads or short circuits, ensuring its integrity.
In their study, researchers have developed a protective circuitry specifically tailored for shielding switching elements from short-circuit currents in high-voltage pulse generators (HVPG). This configuration is particularly useful for HVPGs used in the electroporation of biomass. The method simplifies circuitry and ensures safety, making it suitable for various technological installations with different performance levels.
The critical comment for the manuscript is that the proposed switching units for preventing overall short-circuiting are theoretical. There is no experimental evidence and data to justify the efficiency of the proposed system. Therefore, the reviewer suggests providing the experimental evidence before approving the manuscript to be considered for approval

Specific comments to the authors:
1. Authors mentioned that: HVPGs that implement direct capacitive discharge usually contain energy storage elements, switching nodes for pulsed discharge, voltage and current measurement nodes, and pulse generation control nodes. Reviewer's comment: In my view, there is also a critical role for off/on switch that separates the low and high power sources. When discharging electrical energy from a high power source to the resistive load by opening the discharge switches the aforementioned switch needs to be closed. The authors did not mention about it.
2. Reviewer Comment: The authors mentioned pulse frequency but did not talk about any pulse-forming network for the generation of repetitive pulse and how maximum allowable power

dissipation (Ptm), and the pulse repetition frequency (F) is decreased in different pulse forming networks used in HVPGs

3. Authors mentioned that: Among the various parameters involved in the electroporation process, the pulse repetition frequency has been observed to have a lesser impact on the qualitative indicators of electroporation. This means that adjusting the pulse repetition frequency to address the overload of key transistors does not significantly compromise the overall effectiveness and quality of the electroporation process. Therefore, it can be considered a suitable parameter for regulation without compromising the desired outcome.
Reviewer's comment: I do not agree that PR frequency had a limited role in the electroporation of permeable membranes and consequent effects. It is the critical factor determining the Electric Field Strength achieved above Critical EFS for reversible and irreversible electroporation to happen.
4. The critical comment is that the authors did not mention the role of the magnitude of EFS in electroporation.
4. Authors mentioned that: in Figure 2 the authors describe the HVPG and controlling switch systems
Reviewer's comment: The HVPG needs a low-power source such as inductors (AC to DC converters) for efficient energy transfer from low voltage to storing capacitor. It is already a published fact that charging capacitors with constant voltage via a resistor yields an energetic efficiency of less than 50% and a power utilization of less than 25%. On the other hand, charging with constant currents yields energetic efficiencies of more than 90% (theoretically: 100%) at comparably high-power utilization. Moreover, the authors did not mention any pulse-forming networks for generating pulses for efficient industrial applications.

Is the rationale for developing the new method (or application) clearly explained?
Yes

Is the description of the method technically sound?
Partly

Are sufficient details provided to allow replication of the method development and its use by others?
Partly

If any results are presented, are all the source data underlying the results available to ensure full reproducibility?
No

Are the conclusions about the method and its performance adequately supported by the findings presented in the article?
Partly

Competing Interests: No competing interests were disclosed.

Reviewer Expertise: Bioengineering and application of Pulsed Electric Field in Non Thermal Food

Processing

I confirm that I have read this submission and believe that I have an appropriate level of expertise to state that I do not consider it to be of an acceptable scientific standard, for reasons outlined above.

Reviewer Report 05 February 2024

https://doi.org/10.21956/openreseurope.18249.r37336

© 2024 Zhuang J. This is an open access peer review report distributed under the terms of the Creative Commons Attribution License, which permits unrestricted use, distribution, and reproduction in any medium, provided the original work is properly cited.

Jie Zhuang
[1] Chinese Academy of Sciences, Suzhou Institute of Biomedical Engineering and Technology, Suzhou, China
[2] University of Science and Technology of China, Hefei, Anhui, China

The authors have addressed most of my questions.

Is the rationale for developing the new method (or application) clearly explained?
Partly

Is the description of the method technically sound?
Partly

Are sufficient details provided to allow replication of the method development and its use by others?
Partly

If any results are presented, are all the source data underlying the results available to ensure full reproducibility?
Partly

Are the conclusions about the method and its performance adequately supported by the findings presented in the article?
Partly

Competing Interests: No competing interests were disclosed.

Reviewer Expertise: Electroporation, bioelectrics, pulsed power, dielectric/impedance spectroscopy, plasma medicine

I confirm that I have read this submission and believe that I have an appropriate level of

expertise to confirm that it is of an acceptable scientific standard.

Version 1

Reviewer Report 15 November 2023

https://doi.org/10.21956/openreseurope.17774.r35859

© **2023 Arshad R.** This is an open access peer review report distributed under the terms of the Creative Commons Attribution License, which permits unrestricted use, distribution, and reproduction in any medium, provided the original work is properly cited.



Rai Naveed Arshad
Institute of High Voltage and High Current (IVAT), Universiti Teknologi Malaysia, Skudai, Malaysia

The authors fail to understand the physics of the whole system. Normally, all biomass is placed between electrodes for electric field treatment. The geometry and configuration of these electrodes also contribute to the load resistance. However, authors totally ignore this important attribute.

Capacitors are used for energy storage, so there is no need to mention energy storage.

Figure 1 image was blurry, and the caption was also not correct.

The names of different parts in Figure 2 were inconsistent and inaccurate.

In Figure 3, the current-limiting resistance near the load does not make sense. Also, its caption was incorrect.

Is the rationale for developing the new method (or application) clearly explained?
No

Is the description of the method technically sound?
No

Are sufficient details provided to allow replication of the method development and its use by others?
Yes

If any results are presented, are all the source data underlying the results available to ensure full reproducibility?
Partly

Are the conclusions about the method and its performance adequately supported by the findings presented in the article?

Partly

Competing Interests: No competing interests were disclosed.

Reviewer Expertise: High Voltage Engineering

I confirm that I have read this submission and believe that I have an appropriate level of expertise to state that I do not consider it to be of an acceptable scientific standard, for reasons outlined above.

Author Response 20 Nov 2023

Alexander Golberg

Reviewer: The authors fail to understand the physics of the whole system. Normally, all biomass is placed between electrodes for electric field treatment. The geometry and configuration of these electrodes also contribute to the load resistance. However, authors totally ignore this important attribute.

Reply to Reviewer: This article is dedicated to a system (hardware-software) solution for ensuring the protection function of key transistors from overload and short-circuit currents in a specific functional node, rather than the entire device as a whole. The focus of the article is solely on the switching node of high-voltage pulse generators (HVPG), implemented using a direct capacitive discharge scheme with the proposed protective functions provided by the authors' system software. The term "load" is abstractly defined in this article, which is deemed sufficient. Devices directly in contact with electroporated biomass are external to the HVPG and are connected to it through corresponding interfaces. For instance, external devices such as a press-electrode device for discrete electroporation processes and a flow-electrode extrusion device for continuous electroporation of various types of biomass are used by us as external devices.

Reviewer: Capacitors are used for energy storage, so there is no need to mention energy storage.

Reply to Reviewer: In the presented article, it is very important and necessary to emphasize that, along with the energy storage function, the energy storage capacitor also performs a metrological function.

Figure 1 image was blurry, and the caption was also not correct. Corrected as requested

The names of different parts in Figure 2 were inconsistent and inaccurate. Corrected as requested

Reviewer: In Figure 3, the current-limiting resistance near the load does not make sense. Also, its caption was incorrect.

Reply to Reviewer: In the key transistors used as switching elements and in the switching modules, there is a parameter known as the maximum permissible current that this

element can withstand within a certain period of time. This time interval is typically in the range of 10 microseconds to 1 millisecond. In order to prevent destructive current values in the event of a short circuit, in our designs, we use low-ohmic and low-inductive current-limiting resistors that perform the first protective function when a short circuit occurs. Subsequently, hardware protection is triggered, interrupting the active current pulse, and then the microcontroller program discontinues further delivery of pulses to the short-circuited load.

Competing Interests: No competing interests were disclosed.

Author Response 22 Nov 2023

Alexander Golberg

Reviewer: The authors fail to understand the physics of the whole system. Normally, all biomass is placed between electrodes for electric field treatment. The geometry and configuration of these electrodes also contribute to the load resistance. However, authors totally ignore this important attribute.
Reply to Reviewer: This article is dedicated to a system (hardware-software) solution for ensuring the protection function of key transistors from overload and short-circuit currents in a specific functional node, rather than the entire device as a whole. The focus of the article is solely on the switching node of high-voltage pulse generators (HVPG), implemented using a direct capacitive discharge scheme with the proposed protective functions provided by the authors' system software. The term "load" is abstractly defined in this article, which is deemed sufficient. Devices directly in contact with electroporated biomass are external to the HVPG and are connected to it through corresponding interfaces. For instance, external devices such as a press-electrode device for discrete electroporation processes and a flow-electrode extrusion device for continuous electroporation of various types of biomass are used by us as external devices.

Reviewer: Capacitors are used for energy storage, so there is no need to mention energy storage.
Reply to Reviewer: In the presented article, it is very important and necessary to emphasize that, along with the energy storage function, the energy storage capacitor also performs a metrological function.

Figure 1 image was blurry, and the caption was also not correct. **Corrected as requested**

The names of different parts in Figure 2 were inconsistent and inaccurate. **Corrected as requested**

Reviewer: In Figure 3, the current-limiting resistance near the load does not make sense. Also, its caption was incorrect.
Reply to Reviewer: In the key transistors used as switching elements and in the switching modules, there is a parameter known as the maximum permissible current that this element can withstand within a certain period of time. This time interval is typically in the range of 10 microseconds to 1 millisecond. In order to prevent destructive current values in

the event of a short circuit, in our designs, we use low-ohmic and low-inductive current-limiting resistors that perform the first protective function when a short circuit occurs. Subsequently, hardware protection is triggered, interrupting the active current pulse, and then the microcontroller program discontinues further delivery of pulses to the short-circuited load.

Competing Interests: No competing interests were disclosed.

Reviewer Report 10 November 2023

https://doi.org/10.21956/openreseurope.17774.r35852

© 2023 Zhuang J. This is an open access peer review report distributed under the terms of the Creative Commons Attribution License, which permits unrestricted use, distribution, and reproduction in any medium, provided the original work is properly cited.



Jie Zhuang
[1] Chinese Academy of Sciences, Suzhou Institute of Biomedical Engineering and Technology, Suzhou, China
[2] University of Science and Technology of China, Hefei, Anhui, China

The authors of this manuscript proposed a software-based circuit design aiming at overload and short-circuit protection for high voltage pulse generators used in biomass electroporation. Semiconductor switches, as critical components in solid-state high-voltage pulse generators, must be protected to ensure proper operation of the pulse generator. Undoubtedly, more efficient, cost-effective, reliable and effective protection methods are very attractive to researchers and engineers in related fields.

My major concerns with this work are as follows:

All the work in this manuscript was only realized theoretically and logically, based on ideal situations. Theoretically, the author's design seems feasible. However, verification and quantitative analysis of the actual protection circuit on a physical pulse generator is lacking. This is crucial to prove the practicality and reliability of the design proposed by the authors.

There are significant differences between the circuit design of a high-voltage (above kV) pulse generator and the design of a low-voltage (5V, 12V or 24V) digital logic circuit, especially with respect to electrical isolation and electromagnetic interference considerations. On the one hand, the protection strategy based on software algorithms proposed in this manuscript may not be fast enough to prevent the switches from being damaged. This often happens because the sampling, calculating and control speed of the microcontroller system are slower than the occurrence of switch damage. On the other hand, it is very common that the operation and communication of the microcontroller will be affected by electromagnetic interference, especially when a short circuit or breakdown in the load circuit occurs, resulting in errors or even system crashes of the microcontroller. For instance, the controlling of switches is often realized by FPGAs because of

better anti-electromagnetic interference capability. In actual product development, it's not that researchers and engineers can't think of using software-based strategies to protect the switches and reduce the complexity of the system, but software protection often can't meet the stability and reliability requirements of applications. Therefore, many product-level pulse generators insist on using hardware-based methods to realize the protection function.

In short, the authors are encouraged to implement their design and conduct experimental studies based on real application scenarios. This will allow the authors and readers to better evaluate the performance of the proposed protection strategy and further verify its feasibility for practical use.

Other comments:

- Page 2 paragraph 1: "This approach eliminates the need for separate circuit solutions to address this issue."

- Page 2 paragraph 2: "This method not only enhances the efficiency and reliability of the technology but also simplifies the design process and ensures a unified approach to protection, regardless of the system's configuration."

- Page 3 right column paragraph 1: "This approach offers greater versatility, cost-effectiveness, and flexibility compared to traditional methods that rely on additional circuit elements."

- Page 9 left column paragraph 2: "This article has presented practical solutions to address the challenges of protecting key transistors in high-voltage pulse generator switching nodes from overloads and short-circuit currents."

- Page 9 right column paragraph 1: "By addressing these protective measures, the article contributes to enhancing the overall performance and reliability of high-voltage pulse generators."

Comment: There are several similar statements in this manuscript. Whether this method enhances reliability, offers claimed advantages needs to be verified experimentally. As mentioned in my major concern, the use of software-based protection may instead reduce the reliability and robustness of the system compared to hardware protection.

- Page 3 left column paragraph 2

Comment: The existence of the second paragraph of Introduction seems redundant. The authors may consider streamlining and integrating this part into the first paragraph, or just delete it.

- Page 3 right column paragraph 2: "Metal oxide semiconductor field effect transistors (MOSFET), insulated gate bipolar transistors (IGBT), and silicon carbide (SiC) transistors are the main types of transistors used in switching nodes."

Comment: The author's description of the classification of solid-state semiconductor switches needs to be adjusted. There are SiC MOSFETs and SiC IGBTs on the market.

- Page 4 right column paragraph 6: Second: minimal impact on biomass electroporation qualitative indicators: Among the various parameters involved in the electroporation process, the pulse repetition frequency has been observed to have a lesser impact on the qualitative indicators of electroporation. This means that adjusting the pulse repetition frequency to address the overload of key transistors does not significantly compromise the overall effectiveness and quality of the electroporation process.

Comment: The above statement and reasoning regarding pulse repetition frequency is not

convincing. It is true that energy deposition on switches can be reduced by lowering the frequency. However, frequency is a very important parameter in electroporation. Especially in many industrial and medical electroporation applications, the selection of the frequency range has been verified by extensive research and experiments. In the above description, if lowering the frequency does not affect the electroporation results, it only means that the frequency parameter set in the application is inappropriate. It cannot be used to justify the strategy of reducing the frequency.

- Page 5 right column paragraph 4: During normal operation, it is acceptable for the initialization voltage on the energy storage capacitor (ESC) to decrease by up to 37% during the specified duration of one pulse. However, if the voltage drop on the ESC exceeds 37% of the initialization voltage when the current pulse is applied, it indicates an abnormal condition.

Comment: How is the threshold 37% determined? This value looks like a threshold for a specific situation. However, this value may be different for different application environments.

Comment: some of the figures are too blurred to see the detail, such as figure 1 and figure 2.

Is the rationale for developing the new method (or application) clearly explained?

Partly

Is the description of the method technically sound?

Partly

Are sufficient details provided to allow replication of the method development and its use by others?

No

If any results are presented, are all the source data underlying the results available to ensure full reproducibility?

No source data required

Are the conclusions about the method and its performance adequately supported by the findings presented in the article?

No

Competing Interests: No competing interests were disclosed.

Reviewer Expertise: Electroporation, bioelectrics, pulsed power, dielectric/impedance spectroscopy

I confirm that I have read this submission and believe that I have an appropriate level of expertise to state that I do not consider it to be of an acceptable scientific standard, for reasons outlined above.

Author Response 20 Nov 2023

Alexander Golberg

The authors of this manuscript proposed a software-based circuit design aiming at overload and short-circuit protection for high voltage pulse generators used in biomass electroporation. Semiconductor switches, as critical components in solid-state high-voltage pulse generators, must be protected to ensure proper operation of the pulse generator. Undoubtedly, more efficient, cost-effective, reliable and effective protection methods are very attractive to researchers and engineers in related fields. My major concerns with this work are as follows:

All the work in this manuscript was only realized theoretically and logically, based on ideal situations. Theoretically, the author's design seems feasible. However, verification and quantitative analysis of the actual protection circuit on a physical pulse generator is lacking. This is crucial to prove the practicality and reliability of the design proposed by the authors.

Reply to Reviewer: We develop and manufacture pulse generators exclusively for internal use as equipment to support planned experiments. The purpose of writing this article is to familiarize the electroporation community with one of the possible options for implementing the protection of key transistors from overloads and short-circuit currents for high-voltage pulse generators with a specific functional purpose and corresponding structural design. Writing this article is one of the planned stages of our current development of a high-voltage pulse generator with microsecond and millisecond pulse duration ranges. The structural design of the high-voltage part of the proposed generator implements the direct capacitive discharge method. In addition to the switching unit presented in the article with the functions of protecting key transistors from overloads and short circuit currents, the development of the entire device includes solving the following problems: a) building the energy storage capacitor bank and the methodology for their selection, b) developing a simpler charging circuit for the energy storage capacitors, c) designing the metrological part of the device's circuitry, d) designing the overall generator circuit, e) developing the microcontroller program, f) developing the computer program. After completing the full development of the device, we will conduct a comprehensive check of its functionality, including the effectiveness of the protection method described in the article.

There are significant differences between the circuit design of a high-voltage (above kV) pulse generator and the design of a low-voltage (5V, 12V or 24V) digital logic circuit, especially with respect to electrical isolation and electromagnetic interference considerations. On the one hand, the protection strategy based on software algorithms proposed in this manuscript may not be fast enough to prevent the switches from being damaged. This often happens because the sampling, calculating and control speed of the microcontroller system are slower than the occurrence of switch damage. On the other hand, it is very common that the operation and communication of the microcontroller will be affected by electromagnetic interference, especially when a short circuit or breakdown in the load circuit occurs, resulting in errors or even system crashes of the microcontroller. For instance, the controlling of switches is often realized by FPGAs because of better anti-

electromagnetic interference capability. In actual product development, it's not that researchers and engineers can't think of using software-based strategies to protect the switches and reduce the complexity of the system, but software protection often can't meet the stability and reliability requirements of applications. Therefore, many product-level pulse generators insist on using hardware-based methods to realize the protection function.

Reply to Reviewer: The method of protection against short circuits (SC) proposed by us is not purely software-based. In the devices we are developing, we do not practice cyclic scanning of pulses using ADC (Analog-to-Digital Converter); instead, we use peak detectors with pre-filtering of outliers in the leading edges of the pulses. This is logical for us, as we need to measure 5 current parameters of electroporation in the time interval between the delivery of successive pulses. These measurements are irrelevant to protecting against short circuits. In this case, the function of the microcontroller and its program involves the preliminary calculation of the permissible voltage drop of the energy storage in the dimension of the threshold voltage and its subsequent setting at the input of the comparator. These operations are performed before the start of the pulses feed process to the load. In the development of our devices, we employ a comprehensive set of measures and schematic solutions to ensure internal (between components and nodes) electromagnetic compatibility (EMC). Based on the experience of many years of using the existing pulse generator with maximum output parameters of 1000 volts and 150 amps, we can state that there have been no program failures of the microcontroller due to EMC reasons.

In short, the authors are encouraged to implement their design and conduct experimental studies based on real application scenarios. This will allow the authors and readers to better evaluate the performance of the proposed protection strategy and further verify its feasibility for practical use.

Reply to Reviewer: We responded to this comment above

Other comments:

- **Page 2 paragraph 1: "This approach eliminates the need for separate circuit solutions to address this issue."**
- **Page 2 paragraph 2: "This method not only enhances the efficiency and reliability of the technology but also simplifies the design process and ensures a unified approach to protection, regardless of the system's configuration."**
- **Page 3 right column paragraph 1: "This approach offers greater versatility, cost-effectiveness, and flexibility compared to traditional methods that rely on additional circuit elements."**
- **Page 9 left column paragraph 2: "This article has presented practical solutions to address the challenges of protecting key transistors in high-voltage pulse generator switching nodes from overloads and short-circuit currents."**

- **Page 9 right column paragraph 1: "By addressing these protective measures, the articlecontributes to enhancing the overall performance and reliability of high-voltage pulse generators."**

Comment: There are several similar statements in this manuscript. Whether this method enhances reliability, offers claimed advantages needs to be verified experimentally. As mentioned in my major concern, the use of software-based protection may instead reduce the reliability and robustness of the system compared to hardware protection.

Reply to Reviewer: The authors agree with the Reviewer's comments regarding the declaration of assumed, rather than confirmed, performance and reliability indicators of the device described in the article. They must be determined by us during long-term use of the device under real operating conditions. At the same time, the method presented in the article is not purely software for protection against short-circuit current. The microcontroller and a small part of its program, in this case, perform only part of the protective function. The hardware components involved in the process are: an energy storage capacitor, key transistors and their driver, a comparator and a low-power transistor switch in the driver control circuit.

- **Page 3 left column paragraph 2**

Comment: The existence of the second paragraph of Introduction seems redundant. The authors may consider streamlining and integrating this part into the first paragraph, or just delete it.

- **Page 3 right column paragraph 2: "Metal oxide semiconductor field effect transistors (MOSFET), insulated gate bipolar transistors (IGBT), and silicon carbide (SiC) transistors are the main types of transistors used in switching nodes."**

Comment: The author's description of the classification of solid-state semiconductor switches needs to be adjusted. There are SiC MOSFETs and SiC IGBTs on the market.

Reply to Reviewer: For the protection method presented in the article, the type of key transistors used is not of fundamental importance. We do not consider their varieties and do not justify the principles of their selection. For example, in our current development we are using IGBT transistors. The content of the article is focused exclusively on the process of interrupting the current pulse in the event of a short circuit in the load and stopping further generation of pulses. The article also presents an implementation option for protecting key transistors from overheating.

- **Page 4 right column paragraph 6: Second: minimal impact on biomass electroporation qualitative indicators: Among the various parameters involved in the electroporation process, the pulse repetition frequency has been observed to have a lesser impact on the qualitative indicators of electroporation. This means that adjusting the pulse repetition frequency to address the overload of key transistors does not significantly compromise the overall effectiveness and quality of the electroporation process.**

Comment: The above statement and reasoning regarding pulse repetition frequency is not convincing. It is true that energy deposition on switches can be reduced by

lowering the frequency. However, frequency is a very important parameter in electroporation. Especially in many industrial and medical electroporation applications, the selection of the frequency range has been verified by extensive research and experiments. In the above description, if lowering the frequency does not affect the electroporation results, it only means that the frequency parameter set in the application is inappropriate. It cannot be used to justify the strategy of reducing the frequency.

Reply to Reviewer: All calculations that are made when developing the mechanical and electrical parts of flow electroporation devices are based on the initially specified performance indicator. In this case, among other initial data, the type of electroporated biomass and its electrical conductivity are taken into account. If the device is intended for one type of biomass, then programmable variability of the pulse repetition frequency to provide protection against overheating of the key transistors is not required. Such devices are used for large industries where productivity is a critical indicator (sugar beet processing, for example). In the case of universal devices that can be used in small agricultural associations for recycling production waste (tops or substandard fruits and vegetables, for example), frequency variability is necessary due to the variety of types of biomass. Similar requirements apply to laboratory devices.

- **Page 5 right column paragraph 4: During normal operation, it is acceptable for the initialization voltage on the energy storage capacitor (ESC) to decrease by up to 37% during the specified duration of one pulse. However, if the voltage drop on the ESC exceeds 37% of the initialization voltage when the current pulse is applied, it indicates an abnormal condition.**

Comment: How is the threshold 37% determined? This value looks like a threshold for a specific situation. However, this value may be different for different application environments.

Reply to Reviewer: The acceptable limit of voltage drop for generated pulses at 37% of the initiation voltage for generators with direct capacitive discharge schemes is a compromise parameter. It is determined by the effective waveform of the pulse from an electroporation perspective and is adopted as the primary parameter in calculations for energy storage capacitor capacities. Direct capacitive discharge defines the shape of the generated pulses in the form of an exponential trapezoid. The less exponential the shape of the generated pulse (or the more rectangular it is), the more efficient the electroporation process becomes due to the more effective manifestation of the electrodynamics of the trailing edge of the pulse. On the other hand, increasing the rectangularity of the pulses is determined by increasing the capacities of energy storage capacitors, and this increase occurs in a logarithmic proportion. Therefore, based on the results of numerous experiments and the practical and justified choices for energy storage capacitor capacities, we have empirically determined, as a compromise parameter, the maximum voltage drop across the energy storage capacitor during the duration of a single pulse to be $1\tau = 37\%$. The threshold voltage value for a specific situation is calculated by the microcontroller depending on the value of the specified initialization voltage and pulse duration. We give an example of such a calculation for the case of setting the initialization voltage to 1000 volts and the specified pulse duration to 10 microseconds. For the transistor we are using, the maximum allowable

current is 700 Amperes with a pulse duration of less than 1 millisecond. The pulse duration of 10 microseconds is a minimally set parameter. With maximum load resistance of the discharge circuit ($R_{DC} = U_{max} / I_{max}$ = 1000V / 200A = 5 Ohm.) and a minimum pulse duration (ti = 10 microseconds), along with the specified voltage of 1000 V and the energy storage capacitor capacitance (CESC = 50 uF), the allowable voltage drop across the energy storage capacitor (ESC) at maximum load is calculated as follows: $U_{RV} = U_{IV} * Exp (- t_i / R_{DC} * C_{ESC}) = 1000 * Exp (10 * 10^{-6} / 5 * 50 * 10^{-6}) = 1000 * Exp (- 0.04) = 1000 * 0.961 = 960.79V$ If the voltage drop across the energy storage capacitor (CESC) in less than 10 microseconds is less than 960.79 V, the maximum pulse current is determined as the short-circuit current. The response time of the protection is determined as follows: a) the time it takes for the ESC to discharge when an impulse is applied in the case of a short circuit in the load circuit until U_{RV} = 960.79 V: $t_{DS} = R_{CN} * C_{ESC} * \ln (U_{IV} / U_{RV}) = 0.7633 * 50 * 10^{-6} * \ln (1000 / 960.79) = 1.5035 * 10^{-6}$ sec, where R_{CN} = 0.7633 Ohms - the resistance of the discharge circuit during a short circuit. b) comparator response time t_{CR} = 16 ns, c) driver response time t_{DR} = 210 ns, d) turn-off time of the control transistor Q3_ $t_{d(off)}$ = 176 ns, e) turn-off time of the key transistor Q1||Q2_$t_{d(off)}$ = 226 ns. Thus, in the event of a short circuit due to protection activation, the active pulse will be interrupted within: $t_{PD} = t_{DS} + t_{CR} + t_{DR} + Q3_t_{d(off)} +$ Q1||Q2_$t_{d(off)} = 1.5035 * 10^{-6} + 16 * 10^{-9} + 210 * 10^{-9} + 176 * 10^{-9} + 226 * 10^{-9} = = 2.1315 * 10^{-6}$ sec. This time is significantly less than the allowable duration for the maximum current for the used transistor. After the active pulse is interrupted, the supply to the load is terminated for the remaining specified number of pulses.

Competing Interests: No competing interests were disclosed.

Author Response 22 Nov 2023

Alexander Golberg

The authors of this manuscript proposed a software-based circuit design aiming at overload and short-circuit protection for high voltage pulse generators used in biomass electroporation. Semiconductor switches, as critical components in solid-state high-voltage pulse generators, must be protected to ensure proper operation of the pulse generator. Undoubtedly, more efficient, cost-effective, reliable and effective protection methods are very attractive to researchers and engineers in related fields. My major concerns with this work are as follows:

All the work in this manuscript was only realized theoretically and logically, based on ideal situations. Theoretically, the author's design seems feasible. However, verification and quantitative analysis of the actual protection circuit on a physical pulse generator is lacking. This is crucial to prove the practicality and reliability of the design proposed by the authors.

Reply to Reviewer: We develop and manufacture pulse generators exclusively for internal use as equipment to support planned experiments. The purpose of writing this article is to familiarize the electroporation community with one of the possible options for implementing the protection of key transistors from overloads and short-circuit currents for high-voltage pulse generators with a specific functional purpose and corresponding

structural design. Writing this article is one of the planned stages of our current development of a high-voltage pulse generator with microsecond and millisecond pulse duration ranges. The structural design of the high-voltage part of the proposed generator implements the direct capacitive discharge method. In addition to the switching unit presented in the article with the functions of protecting key transistors from overloads and short circuit currents, the development of the entire device includes solving the following problems: a) building the energy storage capacitor bank and the methodology for their selection, b) developing a simpler charging circuit for the energy storage capacitors, c) designing the metrological part of the device's circuitry, d) designing the overall generator circuit, e) developing the microcontroller program, f) developing the computer program. After completing the full development of the device, we will conduct a comprehensive check of its functionality, including the effectiveness of the protection method described in the article.

There are significant differences between the circuit design of a high-voltage (above kV) pulse generator and the design of a low-voltage (5V, 12V or 24V) digital logic circuit, especially with respect to electrical isolation and electromagnetic interference considerations. On the one hand, the protection strategy based on software algorithms proposed in this manuscript may not be fast enough to prevent the switches from being damaged. This often happens because the sampling, calculating and control speed of the microcontroller system are slower than the occurrence of switch damage. On the other hand, it is very common that the operation and communication of the microcontroller will be affected by electromagnetic interference, especially when a short circuit or breakdown in the load circuit occurs, resulting in errors or even system crashes of the microcontroller. For instance, the controlling of switches is often realized by FPGAs because of better anti-electromagnetic interference capability. In actual product development, it's not that researchers and engineers can't think of using software-based strategies to protect the switches and reduce the complexity of the system, but software protection often can't meet the stability and reliability requirements of applications. Therefore, many product-level pulse generators insist on using hardware-based methods to realize the protection function.

Reply to Reviewer: The method of protection against short circuits (SC) proposed by us is not purely software-based. In the devices we are developing, we do not practice cyclic scanning of pulses using ADC (Analog-to-Digital Converter); instead, we use peak detectors with pre-filtering of outliers in the leading edges of the pulses. This is logical for us, as we need to measure 5 current parameters of electroporation in the time interval between the delivery of successive pulses. These measurements are irrelevant to protecting against short circuits. In this case, the function of the microcontroller and its program involves the preliminary calculation of the permissible voltage drop of the energy storage in the dimension of the threshold voltage and its subsequent setting at the input of the comparator. These operations are performed before the start of the pulses feed process to the load. In the development of our devices, we employ a comprehensive set of measures and schematic solutions to ensure internal (between components and nodes) electromagnetic compatibility (EMC). Based on the experience of many years of using the existing pulse generator with maximum output parameters of 1000 volts and 150 amps, we

can state that there have been no program failures of the microcontroller due to EMC reasons.

In short, the authors are encouraged to implement their design and conduct experimental studies based on real application scenarios. This will allow the authors and readers to better evaluate the performance of the proposed protection strategy and further verify its feasibility for practical use.

Reply to Reviewer: We responed to this comment abovie

Other comments:

- **Page 2 paragraph 1: "This approach eliminates the need for separate circuit solutions to address this issue."**
- **Page 2 paragraph 2: "This method not only enhances the efficiency and reliability of the technology but also simplifies the design process and ensures a unified approach to protection, regardless of the system's configuration."**
- **Page 3 right column paragraph 1: "This approach offers greater versatility, cost-effectiveness, and flexibility compared to traditional methods that rely on additional circuit elements."**
- **Page 9 left column paragraph 2: "This article has presented practical solutions to address the challenges of protecting key transistors in high-voltage pulse generator switching nodes from overloads and short-circuit currents."**
- **Page 9 right column paragraph 1: "By addressing these protective measures, the article contributes to enhancing the overall performance and reliability of high-voltage pulse generators."**

  Comment: There are several similar statements in this manuscript. Whether this method enhances reliability, offers claimed advantages needs to be verified experimentally. As mentioned in my major concern, the use of software-based protection may instead reduce the reliability and robustness of the system compared to hardware protection.

- Reply to Reviewer: The authors agree with the Reviewer's comments regarding the declaration of assumed, rather than confirmed, performance and reliability indicators of the device described in the article. They must be determined by us during long-term use of the device under real operating conditions. At the same time, the method presented in the article is not purely software for protection against short-circuit current. The microcontroller and a small part of its program, in this case, perform only part of the protective function. The hardware components involved in the process are: an energy storage capacitor, key transistors and their driver, a comparator and a low-power transistor switch in the driver control circuit.
- **Page 3 left column paragraph 2**

Comment: **The existence of the second paragraph of Introduction seems redundant. The authors may consider streamlining and integrating this part into the first paragraph, or just delete it.**

- **Page 3 right column paragraph 2: "Metal oxide semiconductor field effect transistors (MOSFET), insulated gate bipolar transistors (IGBT), and silicon carbide (SiC) transistors are the main types of transistors used in switching nodes."**

  Comment: **The author's description of the classification of solid-state semiconductor switches needs to be adjusted. There are SiC MOSFETs and SiC IGBTs on the market.**

  Reply to Reviewer: For the protection method presented in the article, the type of key transistors used is not of fundamental importance. We do not consider their varieties and do not justify the principles of their selection. For example, in our current development we are using IGBT transistors. The content of the article is focused exclusively on the process of interrupting the current pulse in the event of a short circuit in the load and stopping further generation of pulses. The article also presents an implementation option for protecting key transistors from overheating.

- **Page 4 right column paragraph 6: Second: minimal impact on biomass electroporation qualitative indicators: Among the various parameters involved in the electroporation process, the pulse repetition frequency has been observed to have a lesser impact on the qualitative indicators of electroporation. This means that adjusting the pulse repetition frequency to address the overload of key transistors does not significantly compromise the overall effectiveness and quality of the electroporation process.**

Comment: **The above statement and reasoning regarding pulse repetition frequency is not convincing. It is true that energy deposition on switches can be reduced by lowering the frequency. However, frequency is a very important parameter in electroporation. Especially in many industrial and medical electroporation applications, the selection of the frequency range has been verified by extensive research and experiments. In the above description, if lowering the frequency does not affect the electroporation results, it only means that the frequency parameter set in the application is inappropriate. It cannot be used to justify the strategy of reducing the frequency.**

Reply to Reviewer: All calculations that are made when developing the mechanical and electrical parts of flow electroporation devices are based on the initially specified performance indicator. In this case, among other initial data, the type of electroporated biomass and its electrical conductivity are taken into account. If the device is intended for one type of biomass, then programmable variability of the pulse repetition frequency to provide protection against overheating of the key transistors is not required. Such devices are used for large industries where productivity is a critical indicator (sugar beet processing, for example). In the case of universal devices that can be used in small agricultural

associations for recycling production waste (tops or substandard fruits and vegetables, for example), frequency variability is necessary due to the variety of types of biomass. Similar requirements apply to laboratory devices.

- **Page 5 right column paragraph 4: During normal operation, it is acceptable for the initialization voltage on the energy storage capacitor (ESC) to decrease by up to 37% during the specified duration of one pulse. However, if the voltage drop on the ESC exceeds 37% of the initialization voltage when the current pulse is applied, it indicates an abnormal condition.**

Comment: How is the threshold 37% determined? This value looks like a threshold for a specific situation. However, this value may be different for different application environments.

Reply to Reviewer: The acceptable limit of voltage drop for generated pulses at 37% of the initiation voltage for generators with direct capacitive discharge schemes is a compromise parameter. It is determined by the effective waveform of the pulse from an electroporation perspective and is adopted as the primary parameter in calculations for energy storage capacitor capacities. Direct capacitive discharge defines the shape of the generated pulses in the form of an exponential trapezoid. The less exponential the shape of the generated pulse (or the more rectangular it is), the more efficient the electroporation process becomes due to the more effective manifestation of the electrodynamics of the trailing edge of the pulse. On the other hand, increasing the rectangularity of the pulses is determined by increasing the capacities of energy storage capacitors, and this increase occurs in a logarithmic proportion. Therefore, based on the results of numerous experiments and the practical and justified choices for energy storage capacitor capacities, we have empirically determined, as a compromise parameter, the maximum voltage drop across the energy storage capacitor during the duration of a single pulse to be $1\tau = 37\%$. The threshold voltage value for a specific situation is calculated by the microcontroller depending on the value of the specified initialization voltage and pulse duration. We give an example of such a calculation for the case of setting the initialization voltage to 1000 volts and the specified pulse duration to 10 microseconds. For the transistor we are using, the maximum allowable current is 700 Amperes with a pulse duration of less than 1 millisecond. The pulse duration of 10 microseconds is a minimally set parameter. With maximum load resistance of the discharge circuit ($R_{DC} = U_{max} / I_{max} = 1000V / 200A = 5$ Ohm.) and a minimum pulse duration (ti = 10 microseconds), along with the specified voltage of 1000 V and the energy storage capacitor capacitance (CESC = 50 uF), the allowable voltage drop across the energy storage capacitor (ESC) at maximum load is calculated as follows: $U_{RV} = U_{IV} * Exp (- t_i / R_{DC} * C_{ESC}) = 1000 * Exp (10 * 10^{-6} / 5 * 50 * 10^{-6}) = 1000 * Exp (- 0.04) = 1000 * 0.961 = 960.79V$ If the voltage drop across the energy storage capacitor (CESC) in less than 10 microseconds is less than 960.79 V, the maximum pulse current is determined as the short-circuit current. The response time of the protection is determined as follows: a) the time it takes for the ESC to discharge when an impulse is applied in the case of a short circuit in the load circuit until $U_{RV} = 960.79$ V: $t_{DS} = R_{CN} * C_{ESC} * \ln (U_{IV} / U_{RV}) = 0.7633 * 50 * 10^{-6} * \ln (1000 / 960.79) = 1.5035 * 10^{-6}$ sec, where $R_{CN} = 0.7633$ Ohms - the resistance of the discharge circuit during a short circuit. b) comparator response time $t_{CR} = 16$ ns, c) driver response time $t_{DR} = 210$ ns, d) turn-off time of the control transistor Q3_ $t_{d(off)} = 176$ ns, e) turn-off time of the key transistor Q1||Q2_$t_{d(off)} = 226$ ns. Thus, in the event of a short circuit due to protection activation, the active pulse will be interrupted within: $t_{PD} = t_{DS} + t_{CR} + t_{DR} + Q3_t_{d(off)} + Q1||Q2_t_{d(off)} = 1.5035 * 10^{-6} + 16 *10^{-9} + 210 * 10^{-9} + 176 * 10^{-9} + 226 *$

10^{-9} = = 2.1315*10^{-6} sec. This time is significantly less than the allowable duration for the maximum current for the used transistor. After the active pulse is interrupted, the supply to the load is terminated for the remaining specified number of pulses.

Competing Interests: No competing interests were disclosed.

Reviewer Report 27 October 2023

https://doi.org/10.21956/openreseurope.17774.r35603

© 2023 Novickij V. This is an open access peer review report distributed under the terms of the Creative Commons Attribution License, which permits unrestricted use, distribution, and reproduction in any medium, provided the original work is properly cited.

Vitalij Novickij
Vilnius Gediminas Technical University, Vilnius, Lithuania

The paper is written well and in an understandable manner, however, I do have criticism for the contents.

Authors write: “However, it should be noted that these specialized drivers may not serve as a universal solution for short circuit protection in all applications. Their usage is limited by the maximum parameters of the current and voltage of the pulses, as well as the inability to work with parallel transistor assemblies and switching modules”.

Comment: that depends on the circuit. If Rogowski coils are used it’s very scalable and doesn’t care about the voltage and/or current. You can wind a coil specifically for the device supporting either 10 A or 10 kA. Regarding “inability to work with parallel transistor arrays” the statement is non-accurate. There are multiple solutions since it’ s a routine problem for AC/DC and DC/DC converters.

Authors write: “Metal oxide semiconductor field effect transistors (MOSFET), insulated gate bipolar transistors (IGBT), and silicon carbide (SiC) transistors are the main types of transistors used in switching nodes”.

Comment: the sentence should be fixed. It’ s not like SiC transistors are a separate family of a specific transistor topology. There are SiC based MOSFETs and SiC based IGBTs and not just SiCs.

Authors write: “Failure typically occurs when these transistors overheat above 150°C or when they exceed the maximum impulse collector current (ICM), which operates for a very short but excessive duration for this type of transistor”.

Comment: Not necessarily. During short circuits kA range currents are common, so the reverse voltage due to parasitic inductance distributed in the circuit is also transferred to the DS of the MOSFET or CE in case of IGBTs. So, failure can be the result of overvoltage too, thus snubber

circuits should be introduced or at least a freewheeling diode should be present. Also, most of the latest SiC switches are destroyed not due to current, but the consequence of the current, which is the Joule heating and melting of the pn junctions. It's not possible to dissipate this heat, since the heat conduction of the casing and heatsinks is not good enough to operate in the nanosecond range. Thus, the manufacturers provide a SOA and max current. The authors provided a statement, which makes an impression that high current is another factor, which is not. All of them are Joule heating as a consequence of current flowing.

Authors write: "Thus, by incorporating the pulse repetition frequency as a control parameter, it is possible to maintain the safe operation of the key transistors by effectively managing their power dissipation levels, while ensuring the overall success and quality of the electroporation process."

Comment: It's an overstatement. The frequency of the pulses indeed does not significantly alter the electroporation process (at least in the Hz – kHz range), but it dramatically limits the flow rate of the sample and efficiency of how many L/h you can process. If your frequency is too low, you can't process biomass fast. So there are limits on how "slow" you can be since it's a primarily industrial application of PEF. Economical factors are important.

Authors write: "These drivers are designed to terminate the short-circuit mode within a duration of 1 to 10 microseconds. The transistor, controlled by such a driver, must withstand the short-circuit current during this period."

Comment: I am afraid I cannot agree with the statement. Before SiC technology, indeed staying in the microsecond range was acceptable since the dynamic characteristics of transistors were slow. But with SiC's having a driver/SC protection in the microsecond range is not good enough. There are many switches, which with max DS voltage, can't handle SC for more than 1 us. So, SC circuits should be faster. Also, the authors miss the fact that the SC creates an underdamped RLC circuit, which produces a high frequency damped sine oscillation, which can kill the switches due high dv/dt and di/dt and subsequent overvoltage and overcurrent in the sub- microsecond range (freewheeling diodes are ok only for nominal operation conditions (to comprensate 1-10 uH parasitic inductance influence), but do not handle SC conditions well).

Authors write: "improved efficiency of the switching node by using low-resistance RSENSE resistors in the emitter circuits or eliminating them altogether with saturation current control"

Comment: SC protection drivers employing Rsense resistors is already and old technology. Authors didn' t cover the Rogowski coil SC protectors or the magnetic sensors (Hall effect), which get rid of most of the problems Rsense resistors bring. I personally use MCA1101, with 1.5 MHz bandwidth and response time of 300 ns. But there are many other companies focusing this technology since it does not require galvanic contact with the power circuit.

Authors write: "What sets it apart from commonly employed schematics for building similar nodes is the incorporation of supplementary elements, namely the COMP comparator and the low-power MOSFET transistor Q3."

Comment: I am not sure if this is easier than using technologies described above. Most of modern MOSFET/IGBTs drivers have a disable pin, so using an inductive sensor or a hall sensor to generate above- threshold voltage for disable pin seems easier. Many commercial power converters employ

this technology rather than introduction of ADC, comparator and MOSFET.

Authors write: "Power for the driver and its circuits is provided by an isolating DC-DC converter called the "DC- DC CONVERTER." The volt- age on the ESC is measured using a voltage divider labeled as "HV DEVIDER." The voltage measured at the ESC output of the divider is then fed to the analog-to-digital converter of the microcontroller for ADC conversion, evaluation, storage, and display purposes."

Comment: the speed of ADC is often a bottleneck. I believe this is the reason why the system described by the authors operates in microsecond range.

Authors write: "the system response time to the occurrence of this mode is no more than 10 micro- seconds, which does not lead to failure of key transistors"

Comment: I do not agree with the comment. 10 microseconds do not lead to failure of the specific MOSFET the authors used. But as I have mentioned the SOA is very switch-specific. Also, which is especially lacking in the paper is experimental validation. The system should be tested with breakdown in the load at max voltage + dynamic characteristics should be provided (experimental).

Authors write: "The system method of short circuit protection is practically uncontested when using high-voltage switching modules that do not have appropriate protection"

Comment: This is not true. There are many alternative solutions, which operate even in sub-microsecond range. Please see an example[1]. Also the idea itself to use the capacitor discharge to detect short-circuit is used in other works too[2].

To summarize, I agree that the paper is useful for electroporation community, however, I believe it should be re-written. Firstly, the overstatements should be removed about "uncontested novelty", better and non-biased overview of other methods should be provided, and finally the experimental data with empirical characterization of the system must be provided. If the authors will be able to improve the dynamic characteristics to be in sub- microsecond range – it would be a considerable alternative solution to available methods.

References

1. Kandratsyeu A, Sabaleuski U, Redondo L, Pakhomov A: Four Channel 6.5 kV, 65 A, 100 ns–100 μs Generator with Advanced Control of Pulse and Burst Protocols for Biomedical and Biotechnological Applications. *Applied Sciences*. 2021; **11** (24). Publisher Full Text
2. Jiang B, Gong Y, Li Y: Fault Detection and Location of IGBT Short-Circuit Failure in Modular Multilevel Converters. *Energies*. 2018; **11** (6). Publisher Full Text

Is the rationale for developing the new method (or application) clearly explained?

Partly

Is the description of the method technically sound?

Partly

Are sufficient details provided to allow replication of the method development and its use

by others?
No

If any results are presented, are all the source data underlying the results available to ensure full reproducibility?
No

Are the conclusions about the method and its performance adequately supported by the findings presented in the article?
No

Competing Interests: No competing interests were disclosed.

Reviewer Expertise: I specialise on electroporation (100+ papers) and have a background in electronics and electrical engineering (professor). Building systems and generator for applied electroporation research is my specialisation.

I confirm that I have read this submission and believe that I have an appropriate level of expertise to state that I do not consider it to be of an acceptable scientific standard, for reasons outlined above.

Author Response 20 Nov 2023

Alexander Golberg

The paper is written well and in an understandable manner, however, I do have criticism for the contents.
Thank you

Authors write: "However, it should be noted that these specialized drivers may not serve as a universal solution for short circuit protection in all applications. Their usage is limited by the maximum parameters of the current and voltage of the pulses, as well as the inability to work with parallel transistor assemblies and switching modules".
Comment: that depends on the circuit. If Rogowski coils are used it's very scalable and doesn't care about the voltage and/or current. You can wind a coil specifically for the device supporting either 10 A or 10 kA. Regarding "inability to work with parallel transistor arrays" the statement is non-accurate. There are multiple solutions since it' s a routine problem for AC/DC and DC/DC converters.

Reply to Reviewer: The authors agree with the Reviewer that the electrical circuit of an individual functional unit of the device depends on the overall circuit design. In turn, the construction of the general circuit of the device is determined by its purpose. In our specific case, we are talking about high-voltage pulse generators with a maximum pulse voltage of up to 1000 Volts and maximum pulse currents of 200 - 500 Amperes. The devices we are developing are intended for conducting laboratory experiments using reversible and irreversible electroporation of various types of plant and animal biomass.

Laboratory (non-industrial) application of this type of pulse generators determines the corresponding requirements for their parameters. For example, the pulse repetition rate does not affect the quality of electroporation. It can change during the operating cycle depending on the power consumed by the device, as well as the power that is dissipated on the electroporated biomass. An important parameter in this case is the specified number of pulses that must be applied to the electroporated volume of biomass. The critical parameter is the duration of the pulses. For devices that are designed to power our experiments, pulse durations should range from 10 to 100 microseconds for the relatively high voltage (300 - 1000 Volt) electroporation mode and from 1 to 20 milliseconds for the lower voltage (20 - 300 Volt) extraction mode. The duration of the pulses applied depends on both the type of electroporated biomass and the electrode gap size. If we decide to conduct research using nanosecond pulses, then a possible (and perhaps no alternative) option may be to use a Rogowski coil (belt) as an energy storage device.

The authors also agree with the reviewer that there are many system and circuit solutions for constructing protection against short circuit currents. The option we propose is one of them and, thus, has the right to exist. Moreover, based on our patent research, this technical solution is patentable in systemic and structural terms. In addition, we can also say that the motivating factor in making this decision was working with a low-resistance load of 2 - 5 Ohms, where there is a blurred (fuzzy) boundary between the permissible load and the short circuit state, as well the possibility of electrical breakdown of a thin layer of biomass or unintentional direct contact between the electrodes in the press electrode device.

Authors write: "Metal oxide semiconductor field effect transistors (MOSFET), insulated gate bipolar transistors (IGBT), and silicon carbide (SiC) transistors are the main types of transistors used in switching nodes".

Comment: the sentence should be fixed. It' s not like SiC transistors are a separate family of a specific transistor topology. There are SiC based MOSFETs and SiC based IGBTs and not just SiCs.

Reply to Reviewer: This statement by the authors was based on the "opinion" of ChatGPT as requested: Do IGBT and SiC transistors belong to the group of MOS transistors? IGBT (Insulated Gate Bipolar Transistor) and SiC (Silicon Carbide) transistors are not MOS (Metal-Oxide-Semiconductor) transistors, even though they are semiconductor devices. IGBT is a bipolar transistor with an insulated gate that combines the characteristics of a bipolar transistor and a field-effect transistor. It uses bipolar and MOS structures for amplifying and switching signals in applications with high currents and voltages. SiC transistors, made from silicon carbide, offer advantages in terms of high-temperature stability and efficiency compared to transistors made from silicon. They are often used in high-frequency and high-temperature applications. Therefore, while IGBT and SiC transistors are important semiconductor devices, they do not belong to the family of MOS transistors, such as MOSFET (Metal-Oxide-Semiconductor Field-Effect Transistor), which utilizes MOS technology.

Authors write: **"Failure typically occurs when these transistors overheat above 150°C or when they exceed the maximum impulse collector current (ICM), which operates for a very short but excessive duration for this type of transistor".**

Comment: **Not necessarily. During short circuits kA range currents are common, so the reverse voltage due to parasitic inductance distributed in the circuit is also transferred to the DS of the MOSFET or CE in case of IGBTs. So, failure can be the result of overvoltage too, thus snubber circuits should be introduced or at least a freewheeling diode should be present. Also, most of the latest SiC switches are destroyed not due to current, but the consequence of the current, which is the Joule heating and melting of the pn junctions. It's not possible to dissipate this heat, since the heat conduction of the casing and heatsinks is not good enough to operate in the nanosecond range. Thus, the manufacturers provide a SOA and max current. The authors provided a statement, which makes an impression that high current is another factor, which is not. All of them are Joule heating as a consequence of current flowing.**

Reply to Reviewer: The devices currently in use, as well as those we are developing, use current-limiting resistors with low inductance or resistor assemblies included in the emitter circuits of key transistors. The purpose of these resistors is to limit the short circuit current that occurs during the action of the next pulse. The resistance value of these resistors is calculated based on the maximum permissible single pulse current. For example, for the IGBT transistor IXYN120N120C3 used in our developments, the permissible single pulse current is 700 Amperes, which can operate for no more than one millisecond. In this case, with a maximum voltage of the energy storage capacitor of 1000 Volts, the standard value of the current-limiting resistor should be 1.5 Ohms. If a short circuit occurs during the action of the pulse, then in addition to the current limiting, the rest of the protection, which is described in the presented article, is triggered. The purpose of this protection is:

a) termination of the current impulse,
b) cessation of action of subsequent impulses,
c) stopping the charging of the energy storage device,
d) discharge of the energy storage device.

Protection of key transistors from reverse voltage was not the subject of consideration in this article. In order to create a holistic picture of the construction of a switching node, we inform you that in order to protect key transistors from reverse voltage due to parasitic inductance of electrical circuits in the event of a short circuit, in our developments we use UX-FOB diodes or STTH6012 diodes with ultra-fast recovery time (40 and 50 ns, respectively).

Failure of key transistors can be due to several reasons. In addition to Joule heating and a complex of reasons associated with overvoltage, rupture may occur of internal conductive connections inside the transistor. This rupture is due to the combined factors of heating and electrodynamic load. We did not intend to use the switching node presented in the article in

devices for generating nanosecond pulses. Therefore, when updating the article, we will more specifically define the scope of application of the described circuit solution.

Authors write: **"Thus, by incorporating the pulse repetition frequency as a control parameter, it is possible to maintain the safe operation of the key transistors by effectively managing their power dissipation levels, while ensuring the overall success and quality of the electroporation process."**

Comment: **It's an overstatement. The frequency of the pulses indeed does not significantly alter the electroporation process (at least in the Hz – kHz range), but it dramatically limits the flow rate of the sample and efficiency of how many L/h you can process. If your frequency is too low, you can't process biomass fast. So there are limits on how "slow" you can be since it's a primarily industrial application of PEF. Economical factors are important.**

Reply to Reviewer: All calculations that are made when developing the mechanical and electrical parts of flow electroporation devices are based on the initially specified performance indicator. In this case, among other initial data, the type of electroporated biomass and its electrical conductivity are taken into account. If the device is intended for one type of biomass, then programmable variability of the pulse repetition frequency to provide protection against overheating of the key transistors is not required. Such devices are used for large industries where productivity is a critical indicator (sugar beet processing, for example). In the case of universal devices that can be used in small agricultural associations for recycling production waste (tops or substandard fruits and vegetables, for example), frequency variability is necessary due to the variety of types of biomass. Similar requirements apply to laboratory devices.

Authors write: **"These drivers are designed to terminate the short-circuit mode within a duration of 1 to 10 microseconds. The transistor, controlled by such a driver, must withstand the short-circuit current during this period."**

Comment: **I am afraid I cannot agree with the statement. Before SiC technology, indeed staying in the microsecond range was acceptable since the dynamic characteristics of transistors were slow. But with SiC's having a driver/SC protection in the microsecond range is not good enough. There are many switches, which with max DS voltage, can't handle SC for more than 1 us. So, SC circuits should be faster. Also, the authors miss the fact that the SC creates an underdamped RLC circuit, which produces a high frequency damped sine oscillation, which can kill the switches due high dv/dt and di/dt and subsequent overvoltage and overcurrent in the sub-microsecond range (freewheeling diodes are ok only for nominal operation conditions (to comprensate 1-10 uH parasitic inductance influence), but do not handle SC conditions well).**

Reply to Reviewer: In the future, we do not exclude the possibility of testing the possibility of using high-voltage pulses in the nanosecond range in electroporation devices for technological and medical purposes. However, to date, we can only present in our articles

the experience of developing and using pulse sequence generators in the ranges of 10 - 100 microseconds for monopolar electroporation and 1 - 20 milliseconds for monopolar extraction. For example, during flow electroporation extrusion of pre-coarsely crushed algae, the extraction of the liquid fraction was 15 - 20% greater at a pulse width of 60 microseconds compared to the same indicator at a pulse width of 10 and 100 microseconds with other identical initial parameters (voltage, frequency, flow biomass of the same type and the size of the interelectrode gap). During the long-term operation of one of the existing pulse generators, short circuits occurred at least twice. This generator is made without using the current protection presented in the article. In this case, only the current-limiting resistor assemblies burned out. The transistors remained operational thanks to UX-FOB type diodes connected between the emitters and collectors of the IGBT transistors.

Authors write: "improved efficiency of the switching node by using low-resistance RSENSE resistors in the emitter circuits or eliminating them altogether with saturation current control"

Comment: SC protection drivers employing Rsense resistors is already and old technology. Authors didn' t cover the Rogowski coil SC protectors or the magnetic sensors (Hall effect), which get rid of most of the problems Rsense resistors bring. I personally use MCA1101, with 1.5 MHz bandwidth and response time of 300 ns. But there are many other companies focusing this technology since it does not require galvanic contact with the power circuit.

Reply to Reviewer: The choice of one or another circuit solution is determined not only by the criterion novelty, which is undoubtedly an important factor in providing a competitive advantage, subject to the prospect of mass production of the product. We were faced with the task of creating a device for conducting experiments from available components of mass use with realistic delivery times within the time limits of the current grant. In the proposed circuit design, the energy storage capacitor performs the additional function of measuring current, which eliminates the need to use various types of current sensors. The Rogowski coil is used mainly to generate nanosecond pulses. Together with the rest of the circuit elements, the functional unit described in the article represents one of the options for the system implementation of protection against short circuit currents in devices of the micro- and millisecond range of pulse durations.

Authors write: "What sets it apart from commonly employed schematics for building similar nodes is the incorporation of supplementary elements, namely the COMP comparator and the low-power MOSFET transistor Q3."

Comment: I am not sure if this is easier than using technologies described above. Most of modern MOSFET/IGBTs drivers have a disable pin, so using an inductive sensor or a hall sensor to generate above- threshold voltage for disable pin seems easier. Many commercial power converters employ this technology rather than introduction of ADC, comparator and MOSFET.

Reply to Reviewer: We propose a configuration for protecting against short-circuit currents

in high-voltage pulse generators with microsecond and millisecond pulse duration ranges. The design of these generators is based on a dual-loop scheme, meaning these generators have two discharge circuits (microsecond and millisecond) with their own energy storage elements and charging nodes. The schematic switching node presented in the article is common to both discharge loops. If we consider the variant suggested by the reviewer for using Hall sensors in the device's electrical circuit, then in our case, two such sensors will be required for currents ranging from 200 to 500 Amperes. The first sensor, with an appropriate (and possibly complex) connection scheme to the gates of parallel-connected key transistors, is necessary for short-circuit protection, while the second sensor is needed for measuring the maximum pulse currents. In this case, it should be noted that the electrical potential of the secondary circuits of the first sensor and the coupling circuit corresponds to the gate potentials of the key transistors, which excludes its use for current measurement. Therefore, the schematic protection configuration proposed by us is simpler. The use of MOSFET/IGBT transistor drivers is more acceptable for generators with a constant and stable load. However, the devices we use are connected to an unstable and changing load during pulse operation. For technological reasons (not only related to protecting key transistors), it is necessary for us to set a current cutoff threshold for pulse termination.

Authors write: "Power for the driver and its circuits is provided by an isolating DC-DC converter called the "DC- DC CONVERTER." The volt- age on the ESC is measured using a voltage divider labeled as "HV DEVIDER." The voltage measured at the ESC output of the divider is then fed to the analog-to-digital converter of the microcontroller for ADC conversion, evaluation, storage, and display purposes."

Comment: the speed of ADC is often a bottleneck. I believe this is the reason why the system described by the authors operates in microsecond range.

Reply to Reviewer: As previously mentioned, the development and utilization of high-voltage pulse generators in the microsecond and millisecond pulse duration ranges in our experiments serve a specific purpose. Working in the nanosecond range was not originally intended by us. The ADC of the microcontroller we use measures 5 parameters. Among them, 3 parameters are measured during the pauses between pulse delivery. We measure the maximum values of voltage and current pulses (in the ranges of 20 and 200 Amperes). For this purpose, we do not employ pulse scanning using the ADC but rather utilize peak detectors with pre-filtering of front-end transients.

Authors write: "the system response time to the occurrence of this mode is no more than 10 micro- seconds, which does not lead to failure of key transistors"

Comment: I do not agree with the comment. 10 microseconds do not lead to failure of the specific MOSFET the authors used. But as I have mentioned the SOA is very switch-specific. Also, which is especially lacking in the paper is experimental validation. The system should be tested with breakdown in the load at max voltage + dynamic characteristics should be provided (experimental).

Reply to Reviewer: In this case, the Reviewer has reiterated the statement made in our article that a 10-microsecond pulse does not cause damage to the specific MOSFET. Indeed, for the transistor we are using, the maximum allowable current is 700 Amperes with a pulse duration of less than 1 millisecond. The pulse duration of 10 microseconds is a minimally set parameter. With maximum load resistance of the discharge circuit ($R_{DC} = U_{max} / I_{max}$ = 1000V / 200A = 5 Ohm.) and a minimum pulse duration (ti = 10 microseconds), along with the specified voltage of 1000 V and the energy storage capacitor capacitance (CESC = 50 uF), the allowable voltage drop across the energy storage capacitor (ESC) at maximum load is calculated as follows: $U_{RV} = U_{IV} * Exp (- t_i / R_{DC} * C_{ESC}) = 1000 * Exp (10 * 10^{-6} / 5 * 50 * 10^{-6})$ = 1000 * Exp (- 0.04) = 1000 * 0.961 = 960.79V If the voltage drop across the energy storage capacitor (CESC) in less than 10 microseconds is less than 960.79 V, the maximum pulse current is determined as the short-circuit current. The response time of the protection is determined as follows: a) the time it takes for the ESC to discharge when an impulse is applied in the case of a short circuit in the load circuit until U_{RV} = 960.79 V: $t_{DS} = R_{CN} * C_{ESC} * \ln (U_{IV} / U_{RV}) = 0.7633 * 50 * 10^{-6} * \ln (1000 / 960.79) = 1.5035 * 10^{-6}$ sec, where R_{CN} = 0.7633 Ohms - the resistance of the discharge circuit during a short circuit. b) comparator response time t_{CR} = 16 ns, c) driver response time t_{DR} = 210 ns, d) turn-off time of the control transistor Q3_ $t_{d(off)}$ = 176 ns, e) turn-off time of the key transistor Q1||Q2_$t_{d(off)}$ = 226 ns. Thus, in the event of a short circuit due to protection activation, the active pulse will be interrupted within: $t_{PD} = t_{DS} + t_{CR} + t_{DR} + Q3_t_{d(off)} + Q1||Q2_t_{d(off)} = 1.5035 * 10^{-6} + 16 * 10^{-9} + 210 * 10^{-9} + 176 * 10^{-9} + 226 * 10^{-9} = = 2.1315 * 10^{-6}$ sec. This time is significantly less than the allowable duration for the maximum current for the used transistor. After the active pulse is interrupted, the supply to the load is terminated for the remaining specified number of pulses.

Authors write: "The system method of short circuit protection is practically uncontested when using high-voltage switching modules that do not have appropriate protection"

Comment: This is not true. There are many alternative solutions, which operate even in sub-microsecond range. Please see an example[1]. Also the idea itself to use the capacitor discharge to detect short-circuit is used in other works too[2].

Reply to Reviewer: In their assertion that a system-based approach to short-circuit protection is virtually the only viable option when using high-voltage switching modules, the authors of the article drew upon their experience with existing switching modules of the type HTS 61-240-SI and similar ones. Indeed, these modules lack short-circuit protection. It is sufficient to review their documentation, which contains an extensive list of limitations on the use of these modules. However, the authors do not claim that the systemic protection method is limited to the circuit solution presented in this article. Other alternatives are also possible. The examples provided by the reviewer undoubtedly hold educational and practical value, but only in the event that we decide to develop high-voltage pulse generators intended for the nanosecond pulse duration range. At this stage of our research in the field of electroporation of biomass, we are content with simpler pulse generators in the microsecond and millisecond time ranges.

To summarize, I agree that the paper is useful for electroporation community, however, I believe it should be re-written. Firstly, the overstatements should be removed about "uncontested novelty", better and non-biased overview of other methods should be provided, and finally the experimental data with empirical characterization of the system must be provided. If the authors will be able to improve the dynamic characteristics to be in sub- microsecond range – it would be a considerable alternative solution to available methods.

Reply to Reviewer: First and foremost, the authors would like to express their gratitude to the Reviewer for dedicating their time to review our article and provide feedback. In accordance with the Reviewer's valuable comments, necessary revisions will be made to the article. At the same time, until the research program on electroporation processes in the micro- and millisecond ranges of pulse durations is completed, we will not master the nanosecond range. Just as in radio engineering, where each wavelength range has its own applicability, in our field, we conduct research in our chosen segment. In doing so, we are guided by scientific interests, the required functionality of devices, and ease of implementation in accordance with the required performance parameters. We develop and manufacture pulse generators exclusively for internal use as equipment to support planned experiments. The purpose of writing this article is to familiarize the electroporation community with one of the possible options for implementing the protection of key transistors from overloads and short-circuit currents for high-voltage pulse generators with a specific functional purpose and corresponding structural design. Writing this article is one of the planned stages of our current development of a high-voltage pulse generator with microsecond and millisecond pulse duration ranges. The structural design of the high-voltage part of the proposed generator implements the direct capacitive discharge method. In addition to the switching unit presented in the article with the functions of protecting key transistors from overloads and short circuit currents, the development of the entire device includes solving the following problems: a) building the energy storage capacitor bank and the methodology for their selection, b) developing a simpler charging circuit for the energy storage capacitors, c) designing the metrological part of the device's circuitry, d) designing the overall generator circuit, e) developing the microcontroller program, f) developing the computer program. After completing the full development of the device, we will conduct a comprehensive check of its functionality, including the effectiveness of the protection method described in the article.

Competing Interests: No competing interests were disclosed.

Author Response 22 Nov 2023

Alexander Golberg

The paper is written well and in an understandable manner, however, I do have criticism for the contents.
Thank you

Authors write: "However, it should be noted that these specialized drivers may not

serve as a universal solution for short circuit protection in all applications. Their usage is limited by the maximum parameters of the current and voltage of the pulses, as well as the inability to work with parallel transistor assemblies and switching modules".

Comment: that depends on the circuit. If Rogowski coils are used it's very scalable and doesn't care about the voltage and/or current. You can wind a coil specifically for the device supporting either 10 A or 10 kA. Regarding "inability to work with parallel transistor arrays" the statement is non-accurate. There are multiple solutions since it' s a routine problem for AC/DC and DC/DC converters.

Reply to Reviewer: The authors agree with the Reviewer that the electrical circuit of an individual functional unit of the device depends on the overall circuit design. In turn, the construction of the general circuit of the device is determined by its purpose. In our specific case, we are talking about high-voltage pulse generators with a maximum pulse voltage of up to 1000 Volts and maximum pulse currents of 200 - 500 Amperes. The devices we are developing are intended for conducting laboratory experiments using reversible and irreversible electroporation of various types of plant and animal biomass. Laboratory (non-industrial) application of this type of pulse generators determines the corresponding requirements for their parameters. For example, the pulse repetition rate does not affect the quality of electroporation. It can change during the operating cycle depending on the power consumed by the device, as well as the power that is dissipated on the electroporated biomass. An important parameter in this case is the specified number of pulses that must be applied to the electroporated volume of biomass. The critical parameter is the duration of the pulses. For devices that are designed to power our experiments, pulse durations should range from 10 to 100 microseconds for the relatively high voltage (300 - 1000 Volt) electroporation mode and from 1 to 20 milliseconds for the lower voltage (20 - 300 Volt) extraction mode. The duration of the pulses applied depends on both the type of electroporated biomass and the electrode gap size. If we decide to conduct research using nanosecond pulses, then a possible (and perhaps no alternative) option may be to use a Rogowski coil (belt) as an energy storage device. The authors also agree with the reviewer that there are many system and circuit solutions for constructing protection against short circuit currents. The option we propose is one of them and, thus, has the right to exist. Moreover, based on our patent research, this technical solution is patentable in systemic and structural terms. In addition, we can also say that the motivating factor in making this decision was working with a low-resistance load of 2 - 5 Ohms, where there is a blurred (fuzzy) boundary between the permissible load and the short circuit state, as well the possibility of electrical breakdown of a thin layer of biomass or unintentional direct contact between the electrodes in the press electrode device.

Authors write: "Metal oxide semiconductor field effect transistors (MOSFET), insulated gate bipolar transistors (IGBT), and silicon carbide (SiC) transistors are the main types of transistors used in switching nodes".

Comment: the sentence should be fixed. It' s not like SiC transistors are a separate family of a specific transistor topology. There are SiC based MOSFETs and SiC based IGBTs and not just SiCs.

Reply to Reviewer: This statement by the authors was based on the "opinion" of ChatGPT as

requested: Do IGBT and SiC transistors belong to the group of MOS transistors? IGBT (Insulated Gate Bipolar Transistor) and SiC (Silicon Carbide) transistors are not MOS (Metal-Oxide-Semiconductor) transistors, even though they are semiconductor devices. IGBT is a bipolar transistor with an insulated gate that combines the characteristics of a bipolar transistor and a field-effect transistor. It uses bipolar and MOS structures for amplifying and switching signals in applications with high currents and voltages. SiC transistors, made from silicon carbide, offer advantages in terms of high-temperature stability and efficiency compared to transistors made from silicon. They are often used in high-frequency and high-temperature applications. Therefore, while IGBT and SiC transistors are important semiconductor devices, they do not belong to the family of MOS transistors, such as MOSFET (Metal-Oxide-Semiconductor Field-Effect Transistor), which utilizes MOS technology.

Authors write: **"Failure typically occurs when these transistors overheat above 150°C or when they exceed the maximum impulse collector current (ICM), which operates for a very short but excessive duration for this type of transistor".**

Comment: **Not necessarily. During short circuits kA range currents are common, so the reverse voltage due to parasitic inductance distributed in the circuit is also transferred to the DS of the MOSFET or CE in case of IGBTs. So, failure can be the result of overvoltage too, thus snubber circuits should be introduced or at least a freewheeling diode should be present. Also, most of the latest SiC switches are destroyed not due to current, but the consequence of the current, which is the Joule heating and melting of the pn junctions. It's not possible to dissipate this heat, since the heat conduction of the casing and heatsinks is not good enough to operate in the nanosecond range. Thus, the manufacturers provide a SOA and max current. The authors provided a statement, which makes an impression that high current is another factor, which is not. All of them are Joule heating as a consequence of current flowing.**

Reply to Reviewer: The devices currently in use, as well as those we are developing, use current-limiting resistors with low inductance or resistor assemblies included in the emitter circuits of key transistors. The purpose of these resistors is to limit the short circuit current that occurs during the action of the next pulse. The resistance value of these resistors is calculated based on the maximum permissible single pulse current. For example, for the IGBT transistor IXYN120N120C3 used in our developments, the permissible single pulse current is 700 Amperes, which can operate for no more than one millisecond. In this case, with a maximum voltage of the energy storage capacitor of 1000 Volts, the standard value of the current-limiting resistor should be 1.5 Ohms. If a short circuit occurs during the action of the pulse, then in addition to the current limiting, the rest of the protection, which is described in the presented article, is triggered. The purpose of this protection is: a) termination of the current impulse, b) cessation of action of subsequent impulses, c) stopping the charging of the energy storage device, d) discharge of the energy storage device. Protection of key transistors from reverse voltage was not the subject of consideration in this article. In order to create a holistic picture of the construction of a switching node, we inform you that in order to protect key transistors from reverse voltage due to parasitic inductance of electrical circuits in the event of a short circuit, in our

developments we use UX-FOB diodes or STTH6012 diodes with ultra-fast recovery time (40 and 50 ns, respectively). Failure of key transistors can be due to several reasons. In addition to Joule heating and a complex of reasons associated with overvoltage, rupture may occur of internal conductive connections inside the transistor. This rupture is due to the combined factors of heating and electrodynamic load. We did not intend to use the switching node presented in the article in devices for generating nanosecond pulses. Therefore, when updating the article, we will more specifically define the scope of application of the described circuit solution.

Authors write: "Thus, by incorporating the pulse repetition frequency as a control parameter, it is possible to maintain the safe operation of the key transistors by effectively managing their power dissipation levels, while ensuring the overall success and quality of the electroporation process."

Comment: It's an overstatement. The frequency of the pulses indeed does not significantly alter the electroporation process (at least in the Hz – kHz range), but it dramatically limits the flow rate of the sample and efficiency of how many L/h you can process. If your frequency is too low, you can't process biomass fast. So there are limits on how "slow" you can be since it's a primarily industrial application of PEF. Economical factors are important.

Reply to Reviewer: All calculations that are made when developing the mechanical and electrical parts of flow electroporation devices are based on the initially specified performance indicator. In this case, among other initial data, the type of electroporated biomass and its electrical conductivity are taken into account. If the device is intended for one type of biomass, then programmable variability of the pulse repetition frequency to provide protection against overheating of the key transistors is not required. Such devices are used for large industries where productivity is a critical indicator (sugar beet processing, for example). In the case of universal devices that can be used in small agricultural associations for recycling production waste (tops or substandard fruits and vegetables, for example), frequency variability is necessary due to the variety of types of biomass. Similar requirements apply to laboratory devices.

Authors write: "These drivers are designed to terminate the short-circuit mode within a duration of 1 to 10 microseconds. The transistor, controlled by such a driver, must withstand the short-circuit current during this period."

Comment: I am afraid I cannot agree with the statement. Before SiC technology, indeed staying in the microsecond range was acceptable since the dynamic characteristics of transistors were slow. But with SiC's having a driver/SC protection in the microsecond range is not good enough. There are many switches, which with max DS voltage, can't handle SC for more than 1 us. So, SC circuits should be faster. Also, the authors miss the fact that the SC creates an underdamped RLC circuit, which produces a high frequency damped sine oscillation, which can kill the switches due high dv/dt and di/dt and subsequent overvoltage and overcurrent in the sub-microsecond range (freewheeling diodes are ok only for nominal operation conditions (to comprensate 1-10 uH parasitic inductance influence), but do not handle SC

conditions well).

Reply to Reviewer: In the future, we do not exclude the possibility of testing the possibility of using high-voltage pulses in the nanosecond range in electroporation devices for technological and medical purposes. However, to date, we can only present in our articles the experience of developing and using pulse sequence generators in the ranges of 10 - 100 microseconds for monopolar electroporation and 1 - 20 milliseconds for monopolar extraction. For example, during flow electroporation extrusion of pre-coarsely crushed algae, the extraction of the liquid fraction was 15 - 20% greater at a pulse width of 60 microseconds compared to the same indicator at a pulse width of 10 and 100 microseconds with other identical initial parameters (voltage, frequency, flow biomass of the same type and the size of the interelectrode gap). During the long-term operation of one of the existing pulse generators, short circuits occurred at least twice. This generator is made without using the current protection presented in the article. In this case, only the current-limiting resistor assemblies burned out. The transistors remained operational thanks to UX-FOB type diodes connected between the emitters and collectors of the IGBT transistors.

Authors write: "improved efficiency of the switching node by using low-resistance RSENSE resistors in the emitter circuits or eliminating them altogether with saturation current control"

Comment: SC protection drivers employing Rsense resistors is already and old technology. Authors didn' t cover the Rogowski coil SC protectors or the magnetic sensors (Hall effect), which get rid of most of the problems Rsense resistors bring. I personally use MCA1101, with 1.5 MHz bandwidth and response time of 300 ns. But there are many other companies focusing this technology since it does not require galvanic contact with the power circuit.

Reply to Reviewer: The choice of one or another circuit solution is determined not only by the criterion novelty, which is undoubtedly an important factor in providing a competitive advantage, subject to the prospect of mass production of the product. We were faced with the task of creating a device for conducting experiments from available components of mass use with realistic delivery times within the time limits of the current grant. In the proposed circuit design, the energy storage capacitor performs the additional function of measuring current, which eliminates the need to use various types of current sensors. The Rogowski coil is used mainly to generate nanosecond pulses. Together with the rest of the circuit elements, the functional unit described in the article represents one of the options for the system implementation of protection against short circuit currents in devices of the micro- and millisecond range of pulse durations.

Authors write: "What sets it apart from commonly employed schematics for building similar nodes is the incorporation of supplementary elements, namely the COMP comparator and the low-power MOSFET transistor Q3."

Comment: I am not sure if this is easier than using technologies described above. Most of modern MOSFET/IGBTs drivers have a disable pin, so using an inductive sensor or a hall sensor to generate above- threshold voltage for disable pin seems easier.

Many commercial power converters employ this technology rather than introduction of ADC, comparator and MOSFET.

Reply to Reviewer: We propose a configuration for protecting against short-circuit currents in high-voltage pulse generators with microsecond and millisecond pulse duration ranges. The design of these generators is based on a dual-loop scheme, meaning these generators have two discharge circuits (microsecond and millisecond) with their own energy storage elements and charging nodes. The schematic switching node presented in the article is common to both discharge loops. If we consider the variant suggested by the reviewer for using Hall sensors in the device's electrical circuit, then in our case, two such sensors will be required for currents ranging from 200 to 500 Amperes. The first sensor, with an appropriate (and possibly complex) connection scheme to the gates of parallel-connected key transistors, is necessary for short-circuit protection, while the second sensor is needed for measuring the maximum pulse currents. In this case, it should be noted that the electrical potential of the secondary circuits of the first sensor and the coupling circuit corresponds to the gate potentials of the key transistors, which excludes its use for current measurement. Therefore, the schematic protection configuration proposed by us is simpler. The use of MOSFET/IGBT transistor drivers is more acceptable for generators with a constant and stable load. However, the devices we use are connected to an unstable and changing load during pulse operation. For technological reasons (not only related to protecting key transistors), it is necessary for us to set a current cutoff threshold for pulse termination.

Authors write: "Power for the driver and its circuits is provided by an isolating DC-DC converter called the "DC- DC CONVERTER." The volt- age on the ESC is measured using a voltage divider labeled as "HV DEVIDER." The voltage measured at the ESC output of the divider is then fed to the analog-to-digital converter of the microcontroller for ADC conversion, evaluation, storage, and display purposes."

Comment: the speed of ADC is often a bottleneck. I believe this is the reason why the system described by the authors operates in microsecond range.

Reply to Reviewer: As previously mentioned, the development and utilization of high-voltage pulse generators in the microsecond and millisecond pulse duration ranges in our experiments serve a specific purpose. Working in the nanosecond range was not originally intended by us. The ADC of the microcontroller we use measures 5 parameters. Among them, 3 parameters are measured during the pauses between pulse delivery. We measure the maximum values of voltage and current pulses (in the ranges of 20 and 200 Amperes). For this purpose, we do not employ pulse scanning using the ADC but rather utilize peak detectors with pre-filtering of front-end transients.

Authors write: "the system response time to the occurrence of this mode is no more than 10 micro- seconds, which does not lead to failure of key transistors"

Comment: I do not agree with the comment. 10 microseconds do not lead to failure of the specific MOSFET the authors used. But as I have mentioned the SOA is very switch-specific. Also, which is especially lacking in the paper is experimental validation. The

system should be tested with breakdown in the load at max voltage + dynamic characteristics should be provided (experimental).

Reply to Reviewer: In this case, the Reviewer has reiterated the statement made in our article that a 10-microsecond pulse does not cause damage to the specific MOSFET. Indeed, for the transistor we are using, the maximum allowable current is 700 Amperes with a pulse duration of less than 1 millisecond. The pulse duration of 10 microseconds is a minimally set parameter. With maximum load resistance of the discharge circuit ($R_{DC} = U_{max} / I_{max}$ = 1000V / 200A = 5 Ohm.) and a minimum pulse duration (ti = 10 microseconds), along with the specified voltage of 1000 V and the energy storage capacitor capacitance (CESC = 50 uF), the allowable voltage drop across the energy storage capacitor (ESC) at maximum load is calculated as follows: $U_{RV} = U_{IV} * Exp (- t_i / R_{DC} * C_{ESC}) = 1000 * Exp (10 * 10^{-6} / 5 * 50 * 10^{-6})$ = 1000 * Exp (- 0.04) = 1000 * 0.961 = 960.79V If the voltage drop across the energy storage capacitor (CESC) in less than 10 microseconds is less than 960.79 V, the maximum pulse current is determined as the short-circuit current. The response time of the protection is determined as follows: a) the time it takes for the ESC to discharge when an impulse is applied in the case of a short circuit in the load circuit until U_{RV} = 960.79 V: $t_{DS} = R_{CN} * C_{ESC} * \ln (U_{IV} / U_{RV}) = 0.7633 * 50 * 10^{-6} * \ln (1000 / 960.79) = 1.5035 * 10^{-6}$ sec, where R_{CN} = 0.7633 Ohms - the resistance of the discharge circuit during a short circuit. b) comparator response time t_{CR} = 16 ns, c) driver response time t_{DR} = 210 ns, d) turn-off time of the control transistor Q3_ $t_{d(off)}$ = 176 ns, e) turn-off time of the key transistor Q1||Q2_$t_{d(off)}$ = 226 ns. Thus, in the event of a short circuit due to protection activation, the active pulse will be interrupted within: $t_{PD} = t_{DS} + t_{CR} + t_{DR} + Q3_t_{d(off)} + Q1||Q2_t_{d(off)} = 1.5035 * 10^{-6} + 16 * 10^{-9} + 210 * 10^{-9} + 176 * 10^{-9} + 226 * 10^{-9} = = 2.1315 * 10^{-6}$ sec. This time is significantly less than the allowable duration for the maximum current for the used transistor. After the active pulse is interrupted, the supply to the load is terminated for the remaining specified number of pulses.

Authors write: "The system method of short circuit protection is practically uncontested when using high-voltage switching modules that do not have appropriate protection"

Comment: This is not true. There are many alternative solutions, which operate even in sub-microsecond range. Please see an example[1]. Also the idea itself to use the capacitor discharge to detect short-circuit is used in other works too[2].

Reply to Reviewer: In their assertion that a system-based approach to short-circuit protection is virtually the only viable option when using high-voltage switching modules, the authors of the article drew upon their experience with existing switching modules of the type HTS 61-240-SI and similar ones. Indeed, these modules lack short-circuit protection. It is sufficient to review their documentation, which contains an extensive list of limitations on the use of these modules. However, the authors do not claim that the systemic protection method is limited to the circuit solution presented in this article. Other alternatives are also possible. The examples provided by the reviewer undoubtedly hold educational and practical value, but only in the event that we decide to develop high-voltage pulse generators intended for the nanosecond pulse duration range. At this stage of our research in the field of electroporation of biomass, we are content with simpler pulse generators in

the microsecond and millisecond time ranges.

To summarize, I agree that the paper is useful for electroporation community, however, I believe it should be re-written. Firstly, the overstatements should be removed about "uncontested novelty", better and non-biased overview of other methods should be provided, and finally the experimental data with empirical characterization of the system must be provided. If the authors will be able to improve the dynamic characteristics to be in sub- microsecond range – it would be a considerable alternative solution to available methods.

Reply to Reviewer: First and foremost, the authors would like to express their gratitude to the Reviewer for dedicating their time to review our article and provide feedback. In accordance with the Reviewer's valuable comments, necessary revisions will be made to the article. At the same time, until the research program on electroporation processes in the micro- and millisecond ranges of pulse durations is completed, we will not master the nanosecond range. Just as in radio engineering, where each wavelength range has its own applicability, in our field, we conduct research in our chosen segment. In doing so, we are guided by scientific interests, the required functionality of devices, and ease of implementation in accordance with the required performance parameters. We develop and manufacture pulse generators exclusively for internal use as equipment to support planned experiments. The purpose of writing this article is to familiarize the electroporation community with one of the possible options for implementing the protection of key transistors from overloads and short-circuit currents for high-voltage pulse generators with a specific functional purpose and corresponding structural design. Writing this article is one of the planned stages of our current development of a high-voltage pulse generator with microsecond and millisecond pulse duration ranges. The structural design of the high-voltage part of the proposed generator implements the direct capacitive discharge method. In addition to the switching unit presented in the article with the functions of protecting key transistors from overloads and short circuit currents, the development of the entire device includes solving the following problems: a) building the energy storage capacitor bank and the methodology for their selection, b) developing a simpler charging circuit for the energy storage capacitors, c) designing the metrological part of the device's circuitry, d) designing the overall generator circuit, e) developing the microcontroller program, f) developing the computer program. After completing the full development of the device, we will conduct a comprehensive check of its functionality, including the effectiveness of the protection method described in the article.

Competing Interests: NA