Check for updates

RESEARCH ARTICLE

REVISED Design and additive manufacturing of a lightweight aerospace electric actuator

[version 2; peer review: 1 approved, 2 approved with reservations]

Borja Lizarribar Carrillo[1,2], Borja Prieto[1,2], Miguel Martínez-Iturralde[1,2], Javier García Goikoetxea[1,2], Sergio Montes[3], Ekain San José[3]

[1]CEIT-Basque Research and Technology Alliance (BRTA), Manuel Lardizabal 15, Donostia / San Sebastián, 20018, Spain
[2]Universidad de Navarra, Tecnun, Manuel Lardizabal 13, Donostia / San Sebastián, 20018, Spain
[3]Egile Mechanics S.L., Polígono Industrial Kurutz-Gain, 12, Mendaro, 20850, Spain

v2 **First published:** 21 Jun 2024, **4**:121
https://doi.org/10.12688/openreseurope.17752.1
Latest published: 25 Feb 2025, **4**:121
https://doi.org/10.12688/openreseurope.17752.2

Abstract

Background

The ambitious electrification targets set for the aeronautical sector are leading to a thorough research into improving the performance of different electromechanical components. In this regard, Additive Manufacturing is gaining strength due to the positive physical properties of the processed parts and the freedom in manufacturable geometries.

Methods

Thus, this article presents the design of an electric actuator for an aerospace active sidestick in which Additive Manufacturing is used with the aim of minimising the mass and power consumption of the device. The electromagnetic design of the actuator is detailed, considering 8 different permanent magnet machine topologies, and a mechanical design applying Topology Optimisation to reduce the overall mass of the component is carried out.

Results

Three prototypes involving the rotor, the stator and the casing are manufactured via Laser Powder Bed Fusion in stainless steel and Permendur ($Fe_{49}Co_{49}V_2$) and the corresponding actuators are experimentally tested, showing a great agreement between tests and simulations and excellent repeatability in the electromagnetic

Open Peer Review

Approval Status ? ? ✓

	1	2	3
version 2 (revision) 25 Feb 2025	? view		✓ view
version 1 21 Jun 2024	? view	? view	? view

1. **Uğur Demir**, Marmara University, Istanbul, Turkey
2. **Chi Ma**, Chongqing University, Chongqing, China
3. **Adrien Thabuis**, Ecole Polytechnique Federale Lausanne (EPFL), Lausanne, Switzerland

Any reports and responses or comments on the article can be found at the end of the article.

behaviour of the prototypes.

Conclusions

The research results highlight the great potential of Additive Manufacturing to manufacture functional electrical machine components.

Plain language summary
In order to analyse the potential benefits of using additive manufacturing in the production of electrical machines, this work carries out the mechanical and electromagnetic design of an electric motor, taking into account the geometrical advantages that additive manufacturing allows for the electromagnetic and mechanical design. Finally, three prototypes are manufactured and tested, showing good agreement between simulation and test results.

Keywords
Electrical Machine, Additive Manufacturing, Topology Optimization, Laser Powder Bed Fusion, Selective Laser Melting, Electric Actuator, Electric Motor, Permanent Magnet Machine



This article is included in the Horizon 2020 gateway.



This article is included in the Additive Manufacturing collection.

Corresponding author: Borja Lizarribar Carrillo (blizarribarc@ceit.es)

Author roles: Lizarribar Carrillo B: Conceptualization, Investigation, Methodology, Software, Validation, Writing – Original Draft Preparation, Writing – Review & Editing; **Prieto B**: Conceptualization, Funding Acquisition, Investigation, Methodology, Software, Supervision, Validation, Writing – Original Draft Preparation, Writing – Review & Editing; **Martínez-Iturralde M**: Funding Acquisition, Investigation, Methodology, Project Administration, Supervision, Writing – Review & Editing; **García Goikoetxea J**: Conceptualization, Investigation, Methodology, Software, Visualization; **Montes S**: Conceptualization, Investigation, Methodology, Resources; **San José E**: Conceptualization, Funding Acquisition, Investigation, Project Administration, Validation

Competing interests: No competing interests were disclosed.

Grant information: This project has received funding from the European Union's Horizon 2020 research and innovation programme under grant agreement No [865206](ADDitively manufactured limited angle torque MOTor for Smart Active Inceptors [ADDIMOT]).
The funders had no role in study design, data collection and analysis, decision to publish, or preparation of the manuscript.

Copyright: © 2025 Lizarribar Carrillo B *et al*. This is an open access article distributed under the terms of the Creative Commons Attribution License, which permits unrestricted use, distribution, and reproduction in any medium, provided the original work is properly cited.

How to cite this article: Lizarribar Carrillo B, Prieto B, Martínez-Iturralde M *et al.* **Design and additive manufacturing of a lightweight aerospace electric actuator [version 2; peer review: 1 approved, 2 approved with reservations]** Open Research Europe 2025, **4**:121 https://doi.org/10.12688/openreseurope.17752.2

First published: 21 Jun 2024, **4**:121 https://doi.org/10.12688/openreseurope.17752.1

REVISED **Amendments from Version 1**

The authors have tried to address all the concerns of the reviewers. The main changes made in the new version are

1. More information about material selection has been added in Section 2.1.
2. A short comment on the selection of the optimization algorithm has been added in Section 2.2.
3. Figure 4 has been modified to clarify the size of the final electrical machine. A magnetic flux density plot has also been added.
4. A thermal analysis of the motor has been added at the end of Section 2.2.
5. Two new figures have been added to show the Ansys MotorCAD® model (Figure 5) and temperatures in the actuator model estimated in Ansys MotorCAD® (Figure 6).
6. A panel showing the stator cut-view has been added to Figure 9 (previously labelled Figure 7).

Other minor changes have been made to address reviewer concerns.

Any further responses from the reviewers can be found at the end of the article

1 Introduction

The global objectives of mitigating fuel consumption and reducing CO_2 and NO_x emissions are leading to a profound interest in the electrification of components that were not traditionally electric. One example of this is the Aeronautical sector, in which the growing emphasis on electrification is coupled with a continuous advancement and integration of sophisticated lightweight components[1–3]. To date, the focus has been placed mainly on reducing the mass of mechanical functional components, via costly iterative mechanical design, which is accompanied by a reduction in fuel consumption due to the reduced thrust required for flight. However, the innovative designs that can best fulfill the mass reduction goal are typically difficult to produce using traditional manufacturing methods.

In this context, Topology Optimization (TO) and Additive Manufacturing (AM) confer substantial advantages by optimally distributing material within the given design space and creating lightweight and structurally optimized components, without compromising strength. Moreover, this approach enables rapid prototyping and customization, with minimum material waste, fostering innovation and agility in responding to evolving industry requirements.

Regarding the manufacturing of complete functional equipment which have been designed considering the advantages offered by AM, which also meets the requirements of a given application, has not been extensively explored[4–6]. Research to date has mainly focused on the processing of different metallic alloys (e.g. Ti-based[7–9], Cu-based[10–12], Al-based[13,14], steel-based[15], etc.) and concept validators involving a single component, such as toroids[16–18] and coils[19–22]. With regard to TO, previous work tends to focus on algorithm development rather than on the actual application requirements[23–27].

Owing to the above, this article focuses on the use of AM and TO for the design of an electric actuator that fully meets certain design requirements, with the focus on obtaining multifunctional components with dual magnetic-structural function. Additionally, the option of adding features that provide benefits to the design that are impossible to achieve with conventional manufacturing by lamination and machining is explored.

2 Methods

2.1 Requirements of the actuator application

The designed electric actuator is part of an active sidestick system which is illustrated in Figure 1. With the help of two electric motors coupled to an universal joint, controlled force-feedback is provided to the grip in 2-axis in a quasi-static way (i.e. the angular speed of the electric motors is typically < 1 rad/s). The performance requirements for each of the electric motors are gathered in Table 1.

For the case studied, involving a nearly zero speed application, the AM of soft magnetic materials is highly convenient. In conventional AC motors, working typically at 50/60 Hz, the variable magnetic field in the soft-magnetic material parts and the associated eddy currents lead to considerable power losses in these components, if manufactured as solid blocks. To

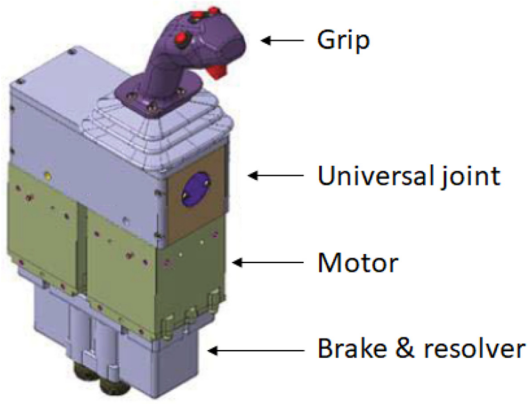

Figure 1. Concept for the active sidestick system (Smart Active Inceptor by Safran Electronics & Defense)[28].

Table 1. Main requirements for the designed actuator.

Requirements	
Envelope	*100 x 100 x 100 mm*
Torque	*8 N·m*
Max. power consumption (stall conditions)	*150 W*
Max. temperature after 120 s operation (stall)	*120 °C*
Mass goal	*≤ 3 kg*

reduce eddy current losses, rotors and stators of AC machines are traditionally manufactured by die-cutting and stacking insulated thin silicon steel laminations. With regard to components manufactured by additive approaches, several strategies have been explored already in the literature in which semi-lamination strategies are applied to mitigate these losses[29–31]. In the present work, due to the extremely low speed and frequency of the application at hand, no lamination or eddy current loss reduction strategy for the soft-magnetic parts has been considered. The material selected for these components is Permendur, an iron-cobalt-vanadium alloy. Iron-cobalt alloys are known for their high magnetic saturation, which gives significant advantages in terms of torque density for electrical machines. Furthermore, testers have been manufactured of FeCo and FeSi by Laser Powder Bed Fusion and it has been concluded that FeCo is a better option in the present case in terms of the density achieved and the cracks that occurred in the manufacture of FeSi6.5 alloys[32]. Details regarding material assessment and optimization of process parameters, including thermal treatment, can be found in 32.

Additive manufacturing of hard-magnetic materials has been discarded within the project, as for now, the magnetic performance (i.e. coercivity, remanence, energy product) of AM hard-magnetic materials is far from that of conventional sintered rare-earth magnets[33–36]. Furthermore, the little space available and the high number of turns derived from the low speed has led to discard the AM of electrical conductors. Conversely, the AM of structural parts in 316L stainless steel has been investigated.

2.2 Actuator topology selection

To explore the possibilities enabled by AM and to select the preliminary actuator geometry with the highest torque density, 8 different machine topologies have been analyzed for a maximum stack length of 55 mm. The studied topologies, which are illustrated in Figure 2, correspond to 6-phase AC permanent magnet motor configurations for the highest torque density. A parametric geometry optimization in terms of FEA and Multi Objective Differential Evolution (MODE)[37] has been conducted for each assessed topology. Despite the fact

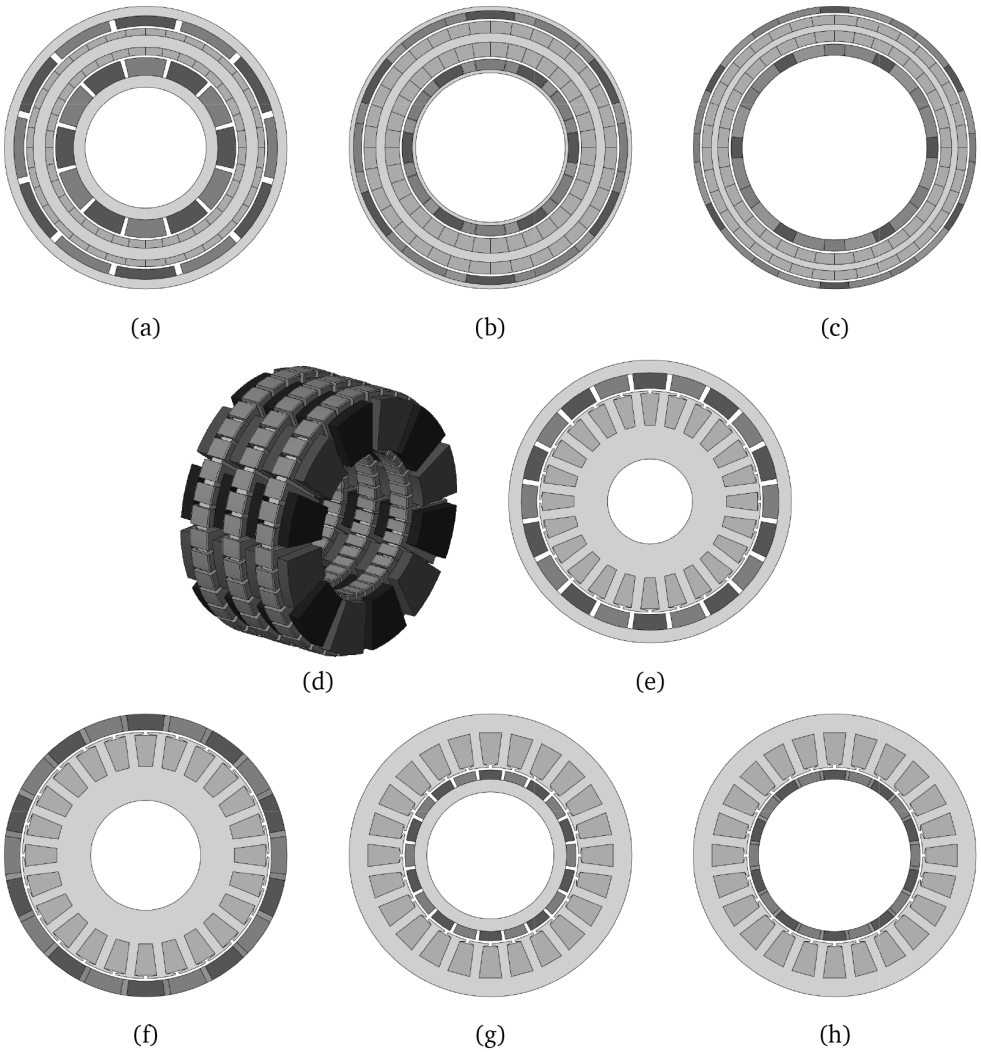

Figure 2. Analysed motor configurations. (**a**) radial flux slotless double rotor, (**b**) radial flux slotless double rotor with Halbach magnets, (**c**) radial flux slotless double rotor yokeless Halbach, (**d**) three-stage axial flux modified as in 38, (**e**) radial flux outer rotor, (**f**) radial flux outer rotor Halbach, (**g**) radial flux inner rotor and (**h**) radial flux inner rotor Halbach.

that multiple optimisation algorithms are used in literature[39] to optimise electrical machines, MODE is widely used in electrical machines optimisation[40–42] due to its simplicity and robustness. The objectives to be optimised have been the mass of the active parts and the electromagnetic torque for the maximum stall power defined in Table 1. The electromagnetic performance has been computed via magnetostatic 2D FE simulations in the software FEMM® by considering the maximum allowable temperature for the magnets and the windings. The DC resistance of the stator has been computed analytically taking into account the mean turn length. The input current has been set for the maximum DC power consumption conditions. The materials considered in the electromagnetic simulation are gathered in Table 2. The results in form of Pareto front obtained for the optimisation of each electrical machine configuration are shown in Figure 3.

From Figure 3, it can be noticed that the motor topologies that are able to achieve the 8 N·m requirement with a DC power consumption of 150 W are the radial ones with a slotted configuration (e-h). Among these, even if they allow for the highest torque densities, the Halbach arrangements without rotor yoke have been discarded due to the following disadvantages: higher magnet volume and cost, more complex mechanical integration needed and the potential electromagnetic noise propagated by the stray flux escaping from the outer diameter, as the magnetic field is not confined inside a magnetic yoke, like in the yoked configurations. In order to better compare the two remaining dispositions, namely the radial flux surface-mounted magnet outer and inner rotor configurations, (e) and (f) respectively in Figure 3 and Figure 2, a preliminary mechanical design has been sketched for both topologies, leading to the results in terms of mass and machined parts gathered in Table 3.

From Table 3 it can be extracted that, in terms of mass and number of machined parts, the best option is the inner rotor configuration. However, since the outer rotor choice is more appropriate for an automatic winding process, it was decided to continue with configuration (f), Figure 2 (f), for further investigation.

The design candidate which is able to deliver 8 N·m with the least mass has been selected from the Pareto front presented

Table 2. Materials used in the electromagnetic FEM simulation.

Component	Material
Rotor	Permendur ($Fe_{49}Co_{49}V_2$) [J_s = 2.26 T]
Stator	Permendur ($Fe_{49}Co_{49}V_2$) [J_s = 2.26 T]
Permanent Magnets	Sm_2Co_{17} (YXG-32 grade) [B_r = 1.08-1.10 T]
Electrical conductors	Enamelled copper wire

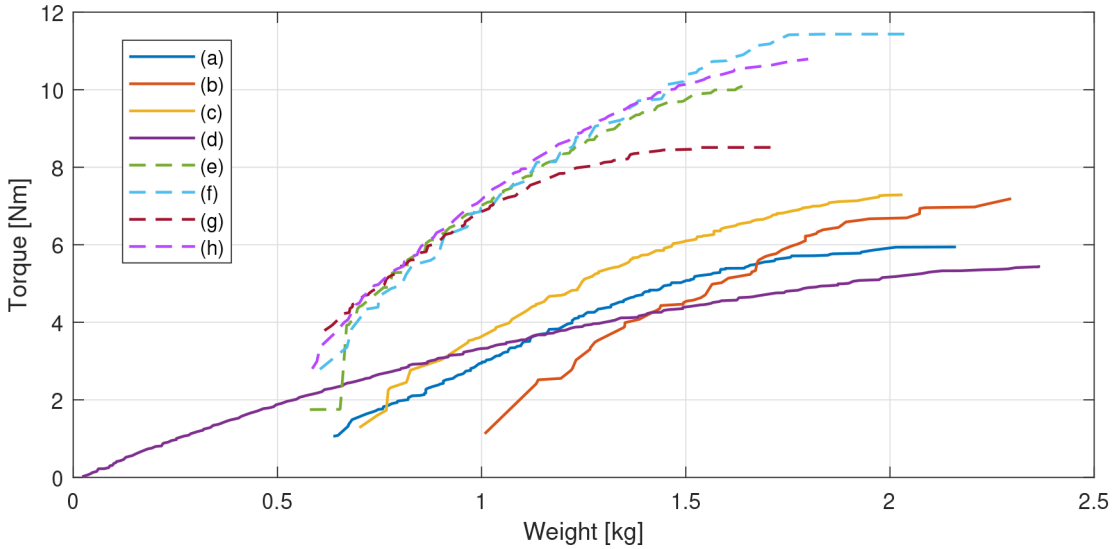

Figure 3. Pareto fronts for the assessed configurations. (**a**) radial flux slotless double rotor, (**b**) radial flux slotless double rotor with Halbach magnets, (**c**) radial flux slotless double rotor yokeless Halbach, (**d**) three-stage axial flux modified as in 38, (**e**) radial flux outer rotor, (**f**) radial flux outer rotor Halbach, (**g**) radial flux inner rotor and (**h**) radial flux inner rotor Halbach.

in Figure 3. To preliminary check the thermal behaviour and the modelling hypotheses of the MODE optimization, the stator corresponding to said design has been additively manufactured in 316L stainless steel and the matching winding has been incorporated. This test has been performed to a stator without housing and rotor. A 120 seconds heating test has been performed feeding the machine with the current level computed in the FE simulations, 14.3 A. The maximum temperature registered has been 90 ºC starting from 52 ºC and a DC consumption of 114 W. After the completion of the test, it has been noticed that the maximum temperature achieved by the winding is significantly lower than the maximum limit of 120 °C and power consumption is also below the limit established by the requirements, 150 W. Then, the motor stack length has been reduced from 55 mm to 44 mm to push the motor design closer to the application limits and get the lowest mass possible. The final electromagnetic design is illustrated in Figure 4.

Table 3. Preliminary mechanical design data for the radial flux surface-mounted magnet configurations.

Configuration	Mass [kg]	# of machined parts
Outer rotor	4.79	5
Inner rotor	3.49	3

Finally, a thermal check of the final model was carried out using Ansys MotorCAD® thermal analysis software. An equivalent model, see Figure 5, is used in this software in which the following assumptions have been made:

- The thermal conductivity in the axial direction of the stator and rotor is considered to be the same as in the radial direction, since they are manufactured as one solid block.
- There is no contact resistance between the stator and the axle as it is to be manufactured as one piece.

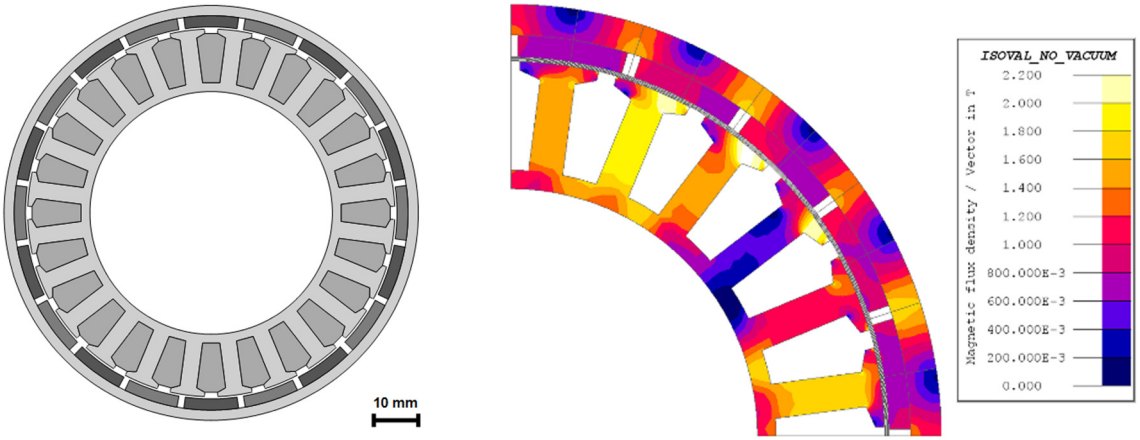

Figure 4. Final electromagnetic design corresponding to 44 mm stack length, left, flux density distribution, right.

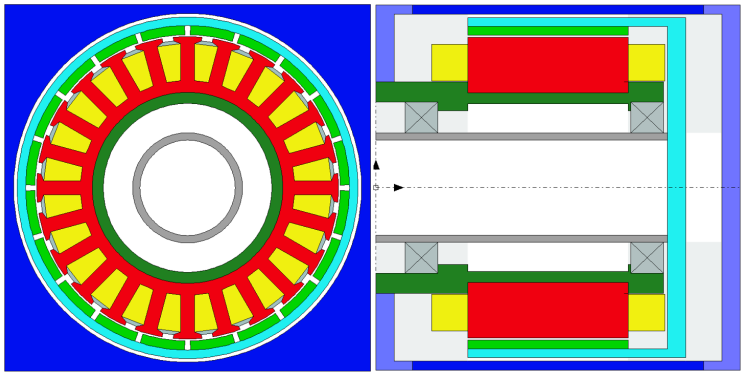

Figure 5. Ansys MotorCAD® model. The results of the thermal analysis are shown in Figure 6, from which it can be concluded that the winding hotspot should not exceed the maximum temperature limit of 120ºC.

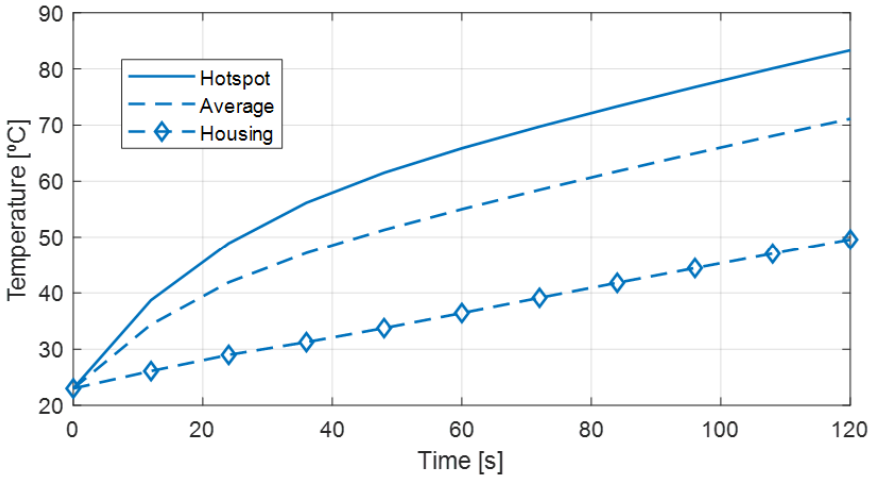

Figure 6. Temperatures in the actuator model estimated in Ansys MotorCAD®.

- There is no contact resistance between the rotor and the shaft as it is to be manufactured as one piece.
- A transient thermal simulation of 120 seconds is performed from a temperature of 23°C.

2.3 Mechanical design

The demanding maximum mass requirement of the application has made it necessary to carry out a thorough study of the mechanical solution. To this end, this section presents the preliminary mechanical design considered, the results of a Topology Optimization of the structural parts and the final mechanical solution.

2.3.1 Preliminary mechanical design. As stated, a first mechanical design for the actuator has been developed, shown in Figure 7. The assembly has been designed in such a way that the rotor and stator parts have both magnetic and structural functions, with the aim of reducing the mass of the actuator as much as possible, eliminate intermediate parts and joints and maximise reliability. The regions with mechanical function have been oversized so that the later TO has material to remove.

2.3.2 Topology optimization. In order to find the optimum geometry that minimises the actuator mass, while maintaining the mechanical integrity, a mechanical TO algorithm from ANSYS Mechanical® has been applied to the rotor and stator parts presented in Figure 7. Although different TO approaches for electromagnetic components have been described in the literature[23–27], in this case it has been decided not to apply TO to the active parts of the rotor and the stator as the soft-magnetic regions are already deeply saturated after the parametric optimisation processes described in Section 2.2. The motor casing has also not been topology optimized due to the thin walls and the low magnitude forces it must sustain. The mechanical loads considered in the mechanical TO are as follows:

- **Radial magnetic load:** peak value computed from FEA. Implemented as a uniform radial pressure of 0.56 MPa in the outer surface of the stator and the inner surface of the rotor.
- **Tangential magnetic load:** a uniform tangential pressure corresponding to the rated torque of 8 N·m with a 150% safety factor (total 12 N·m) has been defined for both rotor and stator.
- **Axial load:** an axial load coming from the universal joint, estimated at 280 N has been considered at the input shaft.
- **Mass of the brake and resolver:** the force corresponding to the mass of the brake and resolver, which hang from the motor rotor, estimated as 25 N have been included.
- **Centrifugal force:** for the rotor, the centrifugal force proportional to the square of the angular velocity has been included (87 rad/s as maximum absolute speed of the rotor during operation).

For the TO, the electromagnetically active regions (windings, stator teeth and rotor and stator yokes) depicted in Figure 4 have been subtracted to ensure the required electromagnetic performance. Additionally, the interfaces with other actuator components such as the universal joint, the brake and the bearing seats have been defined as *frozen*, which means that these surfaces are maintained unchanged along the optimization. A graphical definition of the frozen surfaces of the rotor and stator parts to be topologically optimised is shown in Figure 8.

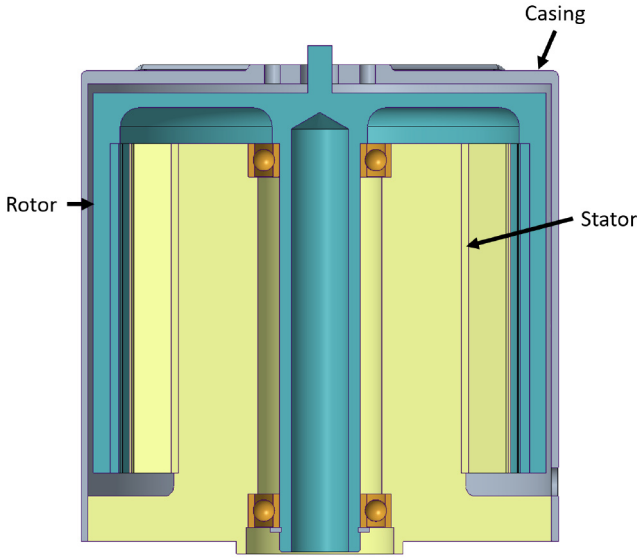

Figure 7. Initial mechanical design layout for the actuator.

After having defined the boundary conditions and acting forces and performing the TO, the geometries obtained are illustrated in Figure 9. In this figure, the newly defined border between material and void is shown in brown, whereas the regions that have been maintained from the initial model are the ones in grey colour. The mass reduction achieved by the TO algorithm is of 80% for the stator and of 42% for the rotor.

By examining the previous figure, it can be concluded that the actuator is mechanically lightly loaded, as the TO algorithm tries to convert almost all the material into void, leaving in some cases ultra thin walls that would be difficult to produce even by additive means. It is then concluded that, for the case study analysed, manufacturability constraints, such as the minimum processing width, are key for defining feasible lightweight structures.

2.3.3 Manufacturing considerations and constraints. To account for the aforementioned constraints, the following modifications have been applied to the final mechanical design.

- First, due to a change in specifications, the casing has been made rectangular to keep the same interface as an existing conventional motor design.
- The previously defined stator part has been split into two parts; namely the stator and a cover. This change has been applied to avoid having a single part with a sudden transition from a massive base to a slender "tower" shape, as the difference in cooling rates among layers when additively manufacturing the part could create excessive internal stresses that caused distortion or cracks in the produced component. The stator has been left to be L-PBF processed in Permendur with magnetic and structural function (housing of the bearings and torque transmission) and it has been decided for the cover to be machined from aluminium to reduce mass.
- The internal diameter of the stator has been defined as the minimum one required to maintain the electromagnetic performance. Two 45º flanges have been incorporated to transition from this diameter to the bearing seats.
- Several curvilinear holes have been added on to the stator to make it possible to route thermal sensor wires and, thus, be able to monitor the temperatures from the least accessible end-winding; see Figure 10. These holes could not have been added in conventional manufacturing.
- The ultra-thin walls between the rotor and the shaft resulting from the TO are hardly manufacturable. To ensure mechanical integrity, while reducing component mass, the union between the magnetic rotor and the torque transmitting shaft has been designed as a spider-web with enough nerves to be manufactured.
- Taking advantage of the complicated shapes attainable by AM, the casing has been designed to incorporate all the required holes for interfacing the several parts and actuator components, while reduce its mass to the maximum. This part would have been almost impossible to produce via non-additive manufacturing methods.

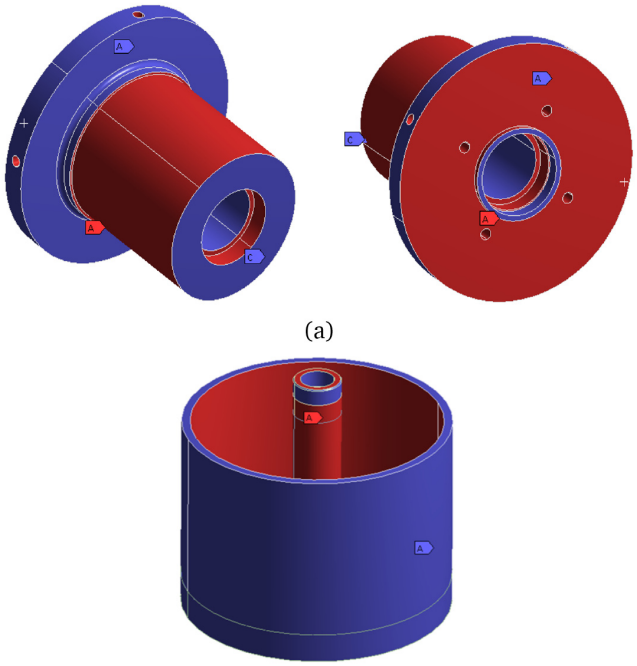

Figure 8. Definition of the frozen surfaces for the mechanical TO (red = frozen, blue = free). (**a**) stator without its magnetic region (**b**) rotor and shaft.

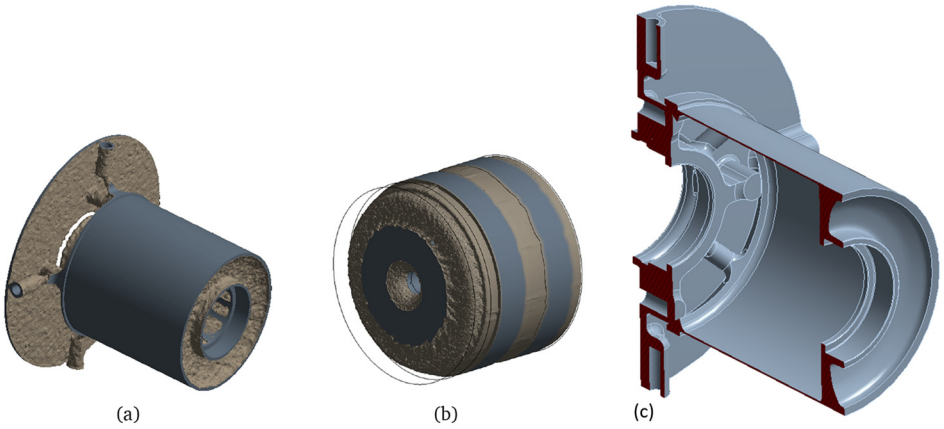

Figure 9. Geometries obtained by the mechanical TO. (**a**) stator (**b**) rotor and shaft (**c**) stator cut-view.

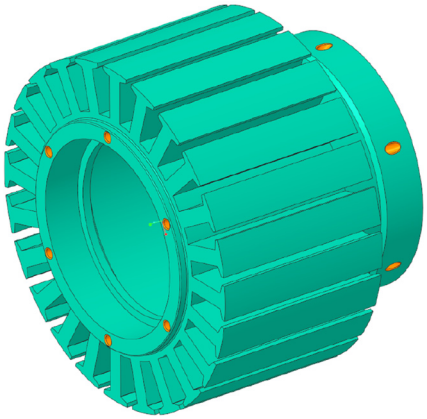

Figure 10. Holes for routing thermal sensor (Pt100) wires.

The final actuator design is presented in Figure 11, in which each part is described together with its corresponding material and manufacturing process.

2.4 Prototype manufacturing

Three different actuator prototypes have been manufactured. The AM parts have been produced by Egile Mechanics via LPBF/SLM in a Renishaw AM 400 machine. For the parts manufactured in Permendur, a heat treatment followed by a controlled cooling rate has been applied to balance the desired electromagnetic and mechanical performance[32]. Afterwards, the components have been separated from the baseplate via Electrical Discharge Machining (EDM). The motor casings have been LPBF processed using gas-atomised 316L stainless steel powder and have been heat treated to relieve stresses according to standard AMS 2759-4. All components have been sandblasted and, after performing the required machining operations, compliance with the required dimensions and tolerances has been checked. The three stators have been wound with enamelled copper wire and impregnated with insulating resin. Sintered SmCo magnets have been glued to the rotors and the covers have been machined from an aluminium block. Finally, the whole electrical machine prototypes have been assembled, as illustrated in Figure 12. Additionally, two of the motor units (prototypes #2 and #3) have been equipped with a DB25 connector in which the power connectors and terminals for PT100 temperature sensors have been integrated. The actuator cable length is approximately 150 mm for prototype #1 and 1000 mm for prototypes #2 and #3.

3 Results

To validate the electromagnetic and mechanical design, in addition to the manufacturing method, the dedicated test bench from Figure 13 has been installed to test the prototypes. The test setup includes a 20 N·m torquemeter (Datum Electronics M425), an elastic coupling to connect it to the shaft of the actuator and a crank for slowly rotating the actuator manually. The motor phases have been sensed with voltage and current probes and monitored with the aid of a data acquisition equipment (Yokogawa SL1000). The temperature measurements from the Pt100 sensors have been registered with a separate data logger switch unit (Agilent 34972A).

3.1 Mass measurements

One of the key goals of this study has been to achieve an actuator as lightweight as possible, with an established goal of $\leq$ 3 kg. In Table 4, mass measurements conducted for the three prototypes are included.

As seen in Table 4, the total mass of all the prototypes is above the goal of 3 kg established in Table 1. Nevertheless, it has to be pointed out that the torque density of the actuator is very remarkable; significantly lower than that of a pre-existing solution based on conventional manufacturing technologies. Additionally, the measured mass includes the additional cable length and DB25 connectors for prototypes #2 and #3.

3.2 Resistance measurements

Phase resistance for the prototypes has been measured at room temperature (about 22 °C) with an RLC-meter (Hioki

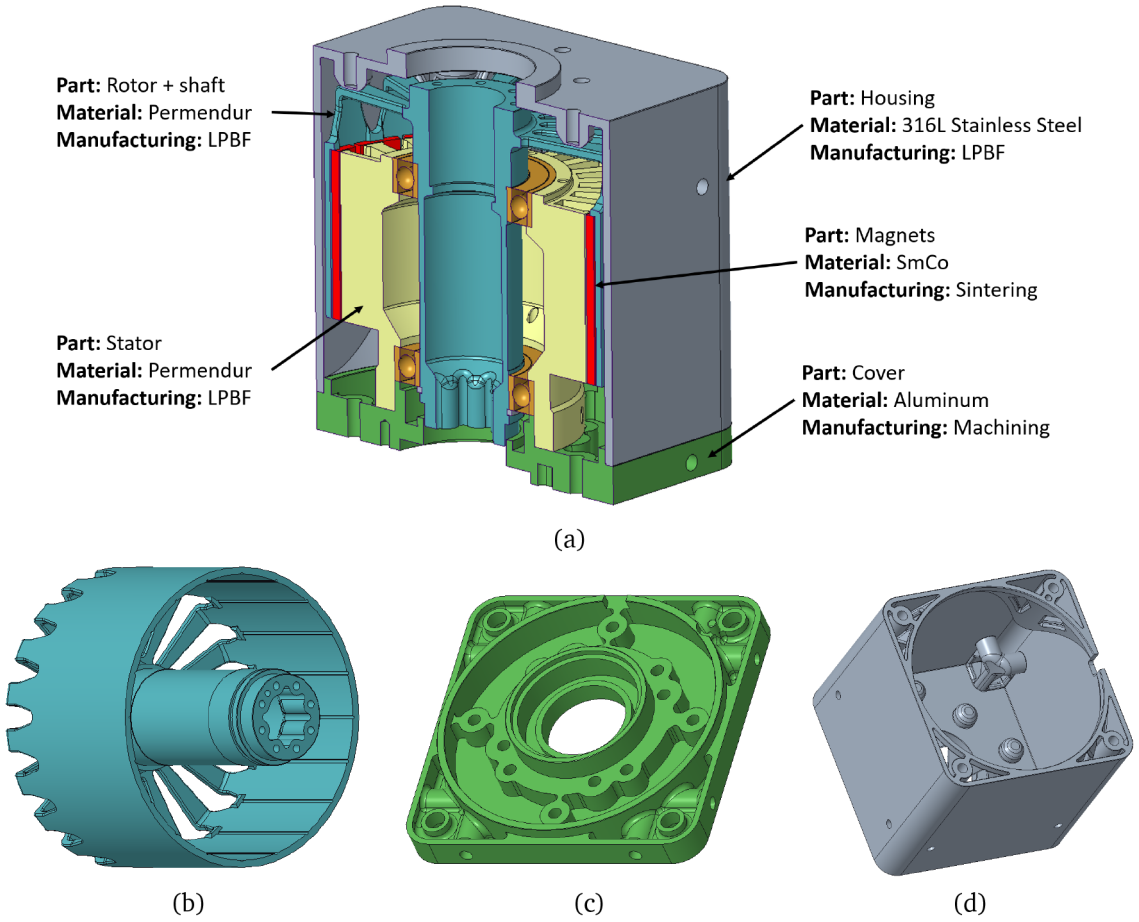

Figure 11. Final mechanical design. (**a**) whole motor section (**b**) rotor and shaft (**c**) cover (**d**) casing.

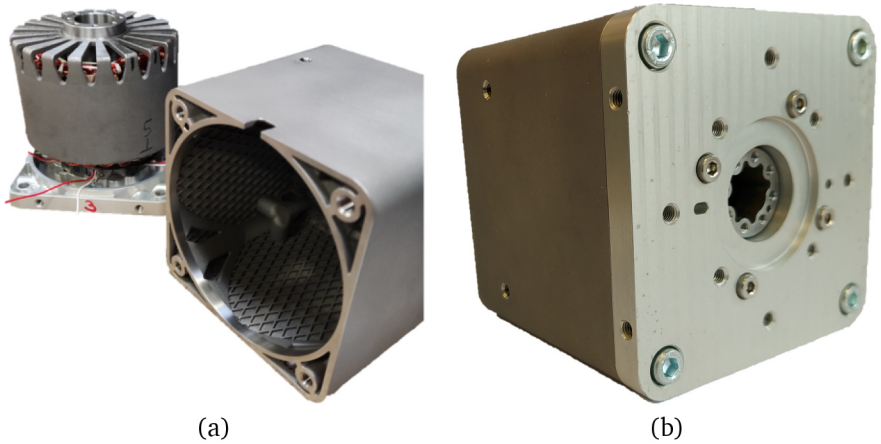

Figure 12. Prototype manufacturing. (**a**) separated components (**b**) assembled prototype.

3522-50) to check for phase unbalance and comparison against design estimations. The results obtained are collected in Table 5.

It can be noticed by examining the measurement results that no significant unbalance exists among the different phases and that the addition of the cable over-length and DB25 connector for prototypes #2 and #3 significantly increases the resistance. The phase resistance value estimated during the design stage has been of 185.6 mΩ, not considering the 1000 mm cable over-length. Thus, the values obtained are considered valid and reasonable.

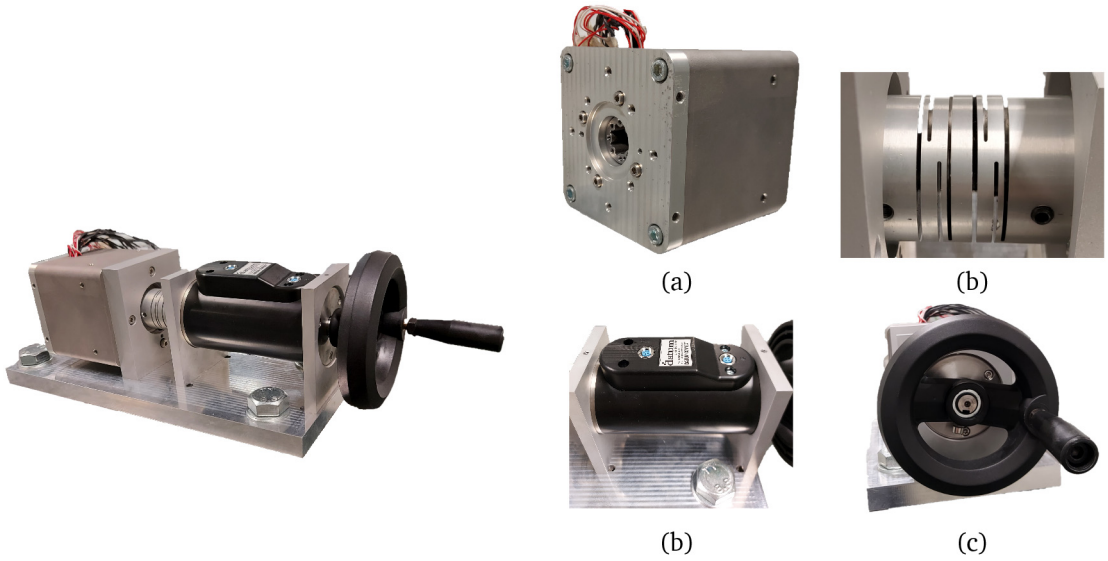

Figure 13. Test bench configuration. (**a**) actuator (**b**) elastic coupling (**c**) torquemeter (**d**) crank.

Table 4. Measured mass for the prototypes.

Prototype	#1	#2	#3
Mass [kg]	3.10	3.15	3.20

Table 5. DC phase resistances measured for each prototype.

DC phase resistance [mΩ]	Prototype 1	Prototype 2	Prototype 3
Phase A	164.8	196.2	197.8
Phase B	165.5	196.1	199.9
Phase C	165.3	196.2	198.3
Phase D	165.0	198.2	200.1
Phase E	164.6	196.3	200.3
Phase F	164.7	195.5	203.5

3.3 Magnet flux linkage measurements

To estimate the flux linkage produced by the magnets, a standard open-circuit test has been conducted on the three prototypes by spinning the crank and recording the induced voltages. Knowing that the back-EMF is the derivative of the flux linkage with respect to time, the registered values have been post-processed to obtain the flux linkage figures (peak values of the first harmonics for each flux linkage curve). The computed values are gathered in Table 6. The value computed by FEA during the design stage is of 18.95 mWb, which makes the comparison between simulated and experimental values very good.

Table 6. Magnet flux linkage at open-circuit conditions.

Magnet flux linkage [mWb]	Prototype 1	Prototype 2	Prototype 3
Phase A	18.66	18.76	18.70
Phase B	18.62	18.58	18.58
Phase C	18.59	18.64	18.41
Phase D	18.69	18.76	18.68
Phase E	18.64	18.61	18.53
Phase F	18.60	18.67	18.52

3.4 Quasi-static torque measurements

Standstill torque measurements have been carried out to assess the actuator performance. To do so, the machine has been fed with a DC current corresponding to the rated peak current (14.2 A) in phases A and D and half of the current in the remaining four phases. Afterwards, the crank has been moved as slowly as possible and the current and torque measurements have been registered. As the machine rotates, a maximum torque value is reached, which corresponds to a 90° alignment between the stator and rotor magnetic fields and is essentially the torque capability of the actuator for the tested current level. The results of the test for the three prototypes are recorded in Table 7. The design torque value for the actuator is of 8.00 Nm, meaning that the maximum difference between measured and design values is just of only the 1.38%. This small difference is in concordance with the flux linkage measurement results.

3.5 Standstill power consumption and temperature measurements

Finally, a DC heating test has been performed with the aforementioned currents on each phase for the three prototypes.

Table 7. Quasi-static torque measurements.

Prototype	# 1	# 2	# 3
Peak torque [N·m]	8.11	8.00	8.07

The aim of this test has been to check the maximum temperature and DC power consumption after two minutes operating at the maximum current. The motor prototypes have started from a temperature of around 23 °C and the crank has not been operated during the test. The temperatures measured by the Pt100 sensors located in the end-windings of the motor at the end of the test are gathered in Table 8. Additionally, the DC power consumed by each actuator just before switching off the power supply is recorded in Table 9.

First, in Table 8, it is shown that the temperatures achieved after the 2 minute heating test are far from the allowable temperature limit of 120 °C. The actuator benefits from the reduced number of joints between the stator core and the output cover, as the solid single-component stator provides for an effective thermal dissipation from the coils to the aluminium cover. Regarding DC power consumption, the measured values are very close to the maximum limit of 150 W defined in Table 1, without exceeding it. The power consumed by each prototype is perfectly in line with the measured phase resistance values.

As a conclusion of the prototype testing campaign, the design and manufacture of the actuators is considered a success, as the main design specifications are met.

4 Discussion

In this paper, the design, both electromagnetic and mechanical, the manufacturing and the testing of an aerospace actuator manufactured by Laser Powder Bed Fusion (LPBF) is presented. For the electromagnetic design, 8 different machine topologies are analyzed and parametrically optimized and the best alternative in terms of electromagnetic performance, mass and ease of manufacturing is selected. The mechanical design of the actuator is also detailed, starting by an initial mechanical design and refining it via topology optimization. Finally, three actuator prototypes are additively manufactured and tested, showing good agreement between design and test results and an excellent repeatability of the magnetic behaviour of the processed soft-magnetic parts.

The additive manufacturing of motor components has allowed to process parts with dual magnetic and structural function, eliminating the need for additional parts and joining operations, improving thus thermal dissipation and allowing a significant reduction in mass (more than 20 %) compared to an existing conventional solution. Topological optimisation has also proved useful for designing highly lightweight structures. Finally, additive manufacturing has made it possible to add features, such as channels through which to route cable sensors or lattices in the casing, that would have been impossible to manufacture using conventional methods.

Table 8. End-winding temperatures after 2 minute DC heating test (malfunctioning Pt100 sensors are indicated by "-").

End-winding temperature [°C]	Prototype 1	Prototype 2	Prototype 3
Phase A	84.7	91.3	86.3
Phase B	-	59.3	-
Phase C	54.8	60.1	58.7
Phase D	-	80.0	74.5
Phase E	-	58.0	51.1
Phase F	-	60.3	54.5

Table 9. DC power consumption after 2 minutes.

Prototype	#1	#2	#3
DC power [W]	121.0	147.5	148.7

In light of the literature review and the work presented in this article, even if additive manufacturing of electrical machines is still in its early phases of development, it shows promising perspectives in terms of repeatability in material properties, ability to process complex 3D multifunctional parts (electromagnetic, thermal and structural), having lightweight topology-optimized structural parts for increased power density and material savings, and allowing an increased performance of cooling systems via a higher degree of integration and feature inclusion. Additional potential benefits to be further analyzed include the possibility of having tuned material properties (e.g. anisotropic electrical and thermal conductivities), free-form coils with high fill factors, reduced end-windings and AC losses, and the direct deposition of high temperature insulation materials.

5 Conclusions

The study carried out in this research, together with the results obtained, highlight the great potential of additive manufacturing for the production of functional electrical machine components. In the case analysed, parts have been produced that are difficult to manufacture using traditional production

methods and that are able to reduce the overall mass of the actuator. Not only the geometric freedom offered by AM, but also the possibility of producing dual-function parts, electromagnetic and mechanical, has been a great advantage in reducing mass and increasing reliability by reducing the number of assembly parts.

Ethics and consent

Ethical approval and consent were not required.

Data availability

Underlying data

No data are associated with this study.

Acknowledgments

The authors are grateful to Safran Electronics & Defense as Topic Manager of the corresponding Clean Sky 2 project and to Lancor 2000 S.Coop for their help in manufacturing the actuator prototype.

References

1. Galea M, Buticchi G, Empringham L, *et al.*: **Design of a high-force-density tubular motor.** *IEEE Trans Ind Appl.* 2014; **50**(4): 2523–2532.
Publisher Full Text
2. Tsampouris EM, Beniakar ME, Kladas AG: **Geometry optimization of PMSMs comparing full and fractional pitch winding configurations for aerospace actuation applications.** *IEEE Trans Magn.* 2012; **48**(2): 943–946.
Publisher Full Text
3. Alvarez P, Satrústegui M, Elósegui I, *et al.*: **Review of high power and high voltage electric motors for single-aisle regional aircraft.** *IEEE Access.* 2022; **10**: 112989–113004.
Publisher Full Text
4. Lee C, Jang IG: **Topology Optimization framework for simultaneously determining the optimal structural design and current phase angle of the IPMSMs for the MTPA control.** *IEEE Trans Ind Electron.* 2023; **70**(3): 2866–2875.
Publisher Full Text
5. **Prototype for small-series production: electric drive housing from a 3D printer.** Accessed: 2023-05-24.
Reference Source
6. Garibaldi M: **Laser Additive Manufacturing of soft magnetic cores for rotating electrical machinery: materials development and part design.** PhD thesis, 12, 2018.
Reference Source
7. Orme ME, Gschweitl M, Ferrari M, *et al.*: **Additive Manufacturing of lightweight, optimized, metallic components suitable for space flight.** *J Spacecr Rockets.* 2017; **54**(5): 1050–1059.
Publisher Full Text
8. Yoo J: **Structural optimization in magnetic fields using the Homogenization Design Method — part II: reduction of vibration caused by magnetic forces.** *Arch Comput Meth Engng.* 2002; **9**: 257–282.
Publisher Full Text
9. Tshephe TS, Akinwamide SO, Olevsky E, *et al.*: **Additive Manufacturing of titanium-based alloys- a review of methods, properties, challenges, and prospects.** *Heliyon.* 2022; **8**(3): e09041.
PubMed Abstract | Publisher Full Text | Free Full Text
10. Simpson N, North DJ, Collins SM, *et al.*: **Additive Manufacturing of shaped profile windings for minimal AC loss in electrical machines.** *IEEE Trans Ind Appl.* 2020; **56**(3): 2510–2519.
Publisher Full Text
11. Selema A, Ibrahim MN, Sergeant P: **Additively manufactured ultralight shaped-profile windings for HF electrical machines and weight-sensitive applications.** *IEEE Trans Transp Electrif.* 2022; **8**(4): 4313–4324.
Publisher Full Text
12. **High conductivity and high strength copper 3D printing.** Accessed: 2023-04-25.
Reference Source
13. Rometsch PA, Zhu Y, Wu X, *et al.*: **Review of high-strength aluminium alloys for Additive Manufacturing by Laser Powder Bed Fusion.** *Mater Des.* 2022; **219**: 110779.
Publisher Full Text
14. Aboulkhair NT, Simonelli M, Parry L, *et al.*: **3D printing of aluminium alloys: Additive Manufacturing of aluminium alloys using Selective Laser Melting.** *Prog Mater Sci.* 2019; **106**: 100578.
Publisher Full Text
15. Zaharia SM, Pop MA, Buican GR, *et al.*: **Design and testing of brushless DC motor components of A6 steel Additively Manufactured by Selective Laser Sintering.** *Aerospace.* 2023; **10**(1): 60.
Publisher Full Text
16. Tiismus H, Kallaste A, Belahcen A, *et al.*: **Hysteresis measurements and numerical losses segregation of additively manufactured silicon steel for 3D printing electrical machines.** *Appl Sci.* 2020; **10**(18): 6515.
Publisher Full Text
17. Selema A, Beretta M, Van Coppenolle M, *et al.*: **Evaluation of 3D-printed magnetic materials for additively-manufactured electrical machines.** *J Magn Magn Mater.* 2023; **569**(21): 170426.
Publisher Full Text
18. Andreiev A, Hoyer KP, Dula D, *et al.*: **Soft-magnetic behavior of Laser Beam Melted FeSi3 alloy with graded cross-section.** *J Mater Process Technol.* 2021; **296**: 117183.
Publisher Full Text
19. Thabuis A, Ren X, Perriard Y: **Enhanced electric motors using multi-functional 3D printed winding with integrated heat sinks.** *IEEE Trans Energy Convers.* 2023; **38**(2): 849–858.
Publisher Full Text
20. Selema A, Ibrahim MN, Sergeant P: **Development of novel semi-stranded windings for high speed electrical machines enabled by Additive Manufacturing.** *Appl Sci.* 2023; **13**: 1653.
Publisher Full Text
21. Simpson N, Yiannakou G, Felton H, *et al.*: **Direct thermal management of windings enabled by Additive Manufacturing.** *IEEE Trans Ind Appl.* 2023; **59**(2): 1319–1327.
Publisher Full Text
22. Wu F, EL-Refaie AM, Al-Qarni A: **Additively manufactured hollow conductors integrated with heat pipes: design tradeoffs and hardware demonstration.** *IEEE Trans Ind Appl.* 2021; **57**(4): 3632–3642.
Publisher Full Text
23. Kim YS, Park H Il: **Topology Optimization of rotor in synchronous reluctance motor using level set method and shape design sensitivity.** *IEEE Trans Appl Supercond.* 2010; **20**(3): 1093–1096.
Publisher Full Text
24. Hu Y, Xiao Y, Chen B, *et al.*: **Topology Optimization of a consequent-pole rotor with V-shaped magnet placement**. In: *2018 21st International Conference on Electrical Machines and Systems (ICEMS)*. 2018; 234–239.
Publisher Full Text
25. Korman O, Di Nardo M, Degano M, *et al.*: **On the use of Topology Optimization for synchronous reluctance machines design.** *Energies.* 2022; **15**(10): 3719.
Publisher Full Text
26. Lizarribar B, Prieto B, Martinez-Iturralde M, *et al.*: **Novel Topology Optimization method for weight reduction in electrical machines.** *IEEE Access.* 2022; **10**: 67521–67531.
Publisher Full Text
27. Lizarribar B, Prieto B, Selema A, *et al.*: **Multiphysics Topology Optimization of Aluminium and copper conductors for automotive electrical machines.** *IEEE Trans Transport Electrific.* 2024; **10**(4): 9342–9350.
Publisher Full Text
28. **Clean Sky 2**. 2018.
Reference Source
29. Tiismus H, Kallaste A, Naseer MU, *et al.*: **Design and performance of laser additively manufactured core induction motor.** *IEEE Access.* 2022; **10**: 50137–50152.
Publisher Full Text
30. Plotkowski A, Pries J, List F, *et al.*: **Influence of scan pattern and geometry on the microstructure and soft-magnetic performance of additively manufactured Fe-Si.** *Addit Manuf.* 2019; **29**: 100781.
Publisher Full Text

31. Tiismus H, Kallaste A, Belahcen A, *et al.*: **Additive Manufacturing and performance of E-type transformer core.** *Energies.* 2021; **14**(11): 3278.
Publisher Full Text

32. Lizarribar B, Prieto B, Aristizabal M, *et al.*: **Electric aerospace actuator manufactured by Laser Powder Bed Fusion.** *Aerospace.* 2023; **10**(9): 813.
Publisher Full Text

33. White EMH, Kassen AG, Simsek E, *et al.*: **Net shape processing of alnico magnets by Additive Manufacturing.** *IEEE Trans Magn.* 2017; **53**(11): 1–6.
Publisher Full Text

34. Huang J, Yung KC, Ang DTC: **Magnetic properties of $SmCo_5$ alloy fabricated by laser sintering.** *J Mater Sci: Mater Electron.* 2019; **30**: 11282–11290.
Publisher Full Text

35. Paranthaman MP, Yildirim V, Lamichhane TN, *et al.*: **Additive Manufacturing of isotropic NdFeB PPS bonded permanent magnets.** *Materials (Basel).* 2020; **13**(15): 3319.
PubMed Abstract | **Publisher Full Text** | **Free Full Text**

36. Pigliaru L, Rinaldi M, Ciccacci L, *et al.*: **3D printing of high performance polymer-bonded PEEK-NdFeB magnetic composite materials.** *Funct Compos Mater.* 2020; **1**: 4.
Publisher Full Text

37. Storn R, Price K: **Differential evolution – a simple and efficient heuristic for global optimization over continuous spaces.** *J Glob Optim.* 1997; **11**(4): 341–359.
Publisher Full Text

38. Hekmati P, Mirsalim M: **Design and analysis of a novel axial-flux slotless limited-angle torque motor with trapezoidal cross section for the stator.** *IEEE Trans Energy Convers.* 2013; **28**(4): 815–822.
Publisher Full Text

39. Nagarajan VS, Mahadevan B, Vijayarajan K, *et al.*: **Design optimization of ferrite assisted Synchronous Reluctance motor using multi-objective differential evolution algorithm.** *COMPEL - The international journal for computation and mathematics in electrical and electronic engineering.* 2017; **36**(1): 219–239.
Publisher Full Text

40. Alotto P: **A hybrid multiobjective differential evolution method for electromagnetic device optimization.** *COMPEL: The International Journal for Computation and Mathematics in Electrical and Electronic Engineering.* 2011; **30**(6): 1815–1828.
Publisher Full Text

41. Cupertino F, Pellegrino G, Gerada C: **Design of synchronous reluctance motors with multiobjective optimization algorithms.** *IEEE Transactions on Industrial Applications.* 2014; **50**(6): 3617–3627.
Publisher Full Text

42. Gamba M, Pelegrino G, Cupertino F: **Optimal number of rotor parameters for the automatic design of Synchronous Reluctance machines.** *Proceedings of the 2014 International Conference on Electrical Machines (ICEM).* Berlin, 2014; 1334–2134.
Publisher Full Text

Open Peer Review

Current Peer Review Status: ? ? ✓

Version 2

Reviewer Report 13 March 2025

https://doi.org/10.21956/openreseurope.20104.r51924

© **2025 Demir U.** This is an open access peer review report distributed under the terms of the Creative Commons Attribution License, which permits unrestricted use, distribution, and reproduction in any medium, provided the original work is properly cited.

?

Uğur Demir
Marmara University, Istanbul, Turkey

Dear Author,
The comment below #1 was not answered reasonably. The required information should be added at 3rd round.
#1: "the results of the study should improve with a comparison of a shelf product which is similar according to the requirements"
The comment below #2 was answered partially. Because the stated references should be discussed to improve the quality of your manuscript at 3rd round.
#2 : " the design optimization techniques for the actuator should be discussed"
The comment below #3 was not answered. Because the optimization algorithm was not explained in detail. What are objective, design constraints, goal, and etc? It should be added at 3rd round.
#3 : Furthermore, the design optimization techniques for the actuator should be discussed. Besides, topology optimization is dealt with the design of experiments in terms of the parametric design and objectives.

References
1- Demir U, 2021 (Ref 1)
This reference provides an aspects for your project because this paper shows a methodology for lightweight of an actuator/electric machines.

2- Kocabicak Z, et al., 2020 (Ref 2)
This reference provides an aspects for your project because this paper not only shows a methodology for lightweight of an actuator/electric machines and also design of experiments.

3- Demir U, et al., 2021 (Ref 3)
This reference provides an aspects for your project because this paper consider also additive materials such as SOFT MAGNETIC COMPOSITE for actuators.

4- DEMİRCİ B, et al., 2023 (Ref 4)
This reference provides an aspects for your project because this paper not only shows a

methodology for lightweight of an actuator/electric machines and also topology optimization.

5- Demir U, et al., 2023 (Ref 5)
This reference provides an aspects for your project because this paper presents the detailed multi objective optimization for the actuators.

6- Demir U, et al., 2024 (Ref 6)
This reference provides an aspects for your project because this paper provides system based optimization for the actuators.

Best

References

1. Demir U: Improvement of the power to weight ratio for an induction traction motor using design of experiment on neural network. *Electrical Engineering*. 2021; **103** (5): 2267-2284 Publisher Full Text
2. Kocabicak Z, Demir U: Design and optimization of an electromechanical actuator for the latch of a foldable vehicle seat. *Materials Testing*. 2020; **62** (7): 749-755 Publisher Full Text
3. Demir U, Kocabıçak Z: Performance assessments of the material for the traction motor cores of an electric racing kart. *Materials Testing*. 2021; **63** (6): 519-528 Publisher Full Text
4. DEMİRCİ B, DEMİR U, AKGÜN G, YILDIRIM A, et al.: Multi System Level Driving Scenarious Based Topology Optimization of Bracket Design for 2 DoF Vehicle Simulator. *International Journal of Automotive Science and Technology*. 2023; **7** (3): 248-258 Publisher Full Text
5. Demir U, Akgün G, Kocaoğlu S, Okay M, et al.: Comparative Design Improvement of the Growing Rod for the Scoliosis Treatment Considering the Mechanical Complications. *IEEE Access*. 2023; **11**: 40107-40120 Publisher Full Text
6. Demir U, Ehsani M, Demir P, Akinci T: Intelligent Design Optimization for Traction and Steering Motors of an Autonomous Electric Shuttle under Driving Scenarios. *Electronics*. 2024; **13** (3). Publisher Full Text

Competing Interests: No competing interests were disclosed.

Reviewer Expertise: UĞUR DEMİR received the Ph.D. degree in mechatronics engineering from Marmara University, in 2018. He is currently an Associate Professor with the Department of Mechatronics Engineering, Marmara University. He has extensively worked on the development of novel electrical machine technologies and the actuator for electric vehicle traction operations and mechatronics systems. His research interests include the electromagnetic design of electrical machines, design optimization, artificial neural network applications, autonomous driving, and advanced driving technologies.

I confirm that I have read this submission and believe that I have an appropriate level of expertise to confirm that it is of an acceptable scientific standard, however I have significant reservations, as outlined above.

Reviewer Report 11 March 2025

https://doi.org/10.21956/openreseurope.20104.r51576

© 2025 Thabuis A. This is an open access peer review report distributed under the terms of the Creative Commons Attribution License, which permits unrestricted use, distribution, and reproduction in any medium, provided the original work is properly cited.

Adrien Thabuis
Ecole Polytechnique Federale Lausanne (EPFL), Lausanne, Switzerland

I have no further comments to make.

Competing Interests: No competing interests were disclosed.

Reviewer Expertise: Elecromagnetic devices, Additive manufacturing, topology optimization

I confirm that I have read this submission and believe that I have an appropriate level of expertise to confirm that it is of an acceptable scientific standard.

Version 1

Reviewer Report 10 September 2024

https://doi.org/10.21956/openreseurope.19192.r43296

© 2024 Thabuis A. This is an open access peer review report distributed under the terms of the Creative Commons Attribution License, which permits unrestricted use, distribution, and reproduction in any medium, provided the original work is properly cited.

Adrien Thabuis
Ecole Polytechnique Federale Lausanne (EPFL), Lausanne, Switzerland

The article covers the design steps of an electromagnetic (EM) actuator. Multiple topologies are considered and optimized independently for better torque and weight. A machine is selected based on different criteria. Then, focus is put on the mechanical integrity of the device and various methods are explored to reduce its mass.

Next are a few comments I suggest you address for full approval.

1. In the introduction, I would suggest explaining better why reducing the weight/mass of pieces in the aeronautical sector helps mitigate fuel consumption. (I know why but), I think this would allow the reader to focus on that aspect from the start.

2. Please be more careful when using the term weight and mass. We are scientists, they have different meanings. I would suggest using mass everywhere.

3. Better discuss the choice of material, even if a reference is provided, we need to know why you chose this material. A LOT of mass could be saved by considering another material, which could remove the need for such an analysis (or not, but we need to know if you

considered it).

4. In the introduction, you criticize the lack of a full system entirely 3D-printed but still uses conventional PM and conductors. There are some works in the literature already printing the iron parts, so there are no real improvements regarding this aspect. Please rephrase.

5. " All the depicted shapes have been optimized parametrically in terms of FEA," → this does mean anything. Be more precise or remove this sentence.

6. Not clear which physics are solved by the FEA. Magnetostatics or other?

7. The material types used in the simulation are provided. It would be nice to also provide some actual values like remanence of PM and saturating field for the iron alloys

8. When stating "In order to better compare the two remaining dispositions, namely the radial flux surface-mounted magnet outer and inner rotor configurations, a preliminary mechanical design has been sketched for both topologies, leading to the results in terms of weight and machined parts gathered in Table 3." → please add the corresponding letters in from Figure 2 and 3 for clarity.

9. It seems that many of the topologies could have been discarded prior to the analysis. The ease of automatic winding and issues coming from the Halbach arrangement could have been known prior to that → why still considering them?

10. More details are needed for the thermal "check". We don't know how this has been performed, how was the temperature monitored, was it a realistic case? Was it performed with everything assembled or just the stator by itself? Which "cooling conditions", natural convection? → if so we need to know the environment or integration. This is even more critical as the considered topology is an outer rotor configuration which can be more demanding it terms of thermal management.

11. In Figure 4, it would be nice to add some sizes to better grasp the footprint of the actuator. → this helps estimate if manufacturing is realistic.
A view of the magnetic flux density distribution would also help estimate if the EM design is properly done (saturated regions).

12. In the topology optimization part 2.3.2, it is not clear if there has been a constraint on the part stiffness or not? How do you ensure not having the trivial solution of a completely empty part? → what are the constraints to the optimization problem?

13. Figure 7 does not present much information, some "cut-view" could better help visualizing the newly generated design.

14. Most of the modifications proposed in 2.3.3 part could have been integrated within the TO if explored more deeply. Changing so many things after the optimization makes me question the usefulness of such an approach. Considering such constraints beforehand could have maybe resulted in a very different topology.

15. It would be nice to know which insulating resin has been used. This would affect the thermal properties too.

16. How is this motor driven? Are there some Hall sensors?

17. Page 11, there is a typo just before the 3.2 part. “it has to be pointed out hat the torque [...]”, it should be “it has to be pointed out **t**hat the torque”. Please pass over the whole manuscript to avoid such mistakes. There are many free tools that can help you with that ...

18. It is said that the pre-existing solution was heavier but precised how much. It would help better appreciate the improvement.

19. Why are the phase resistances of Proto1 lower than the others?

20. In the conclusion: “Not only the geometric freedom offered by AM, but also the possibility of producing dual-function parts, electromagnetic and mechanical, ”.
Maybe I missed a part but this does not like being the case to me. It seems that you removed all of the parts strongly contributing to the EM performances from the mechanical analysis.

21. Great work overall, congratulations

Is the work clearly and accurately presented and does it cite the current literature?
Yes

Is the study design appropriate and does the work have academic merit?
Yes

Are sufficient details of methods and analysis provided to allow replication by others?
No

If applicable, is the statistical analysis and its interpretation appropriate?
Not applicable

Are all the source data underlying the results available to ensure full reproducibility?
No

Are the conclusions drawn adequately supported by the results?
Partly

Competing Interests: No competing interests were disclosed.

Reviewer Expertise: Elecromagnetic devices, Additive manufacturing, topology optimization

I confirm that I have read this submission and believe that I have an appropriate level of expertise to confirm that it is of an acceptable scientific standard, however I have

significant reservations, as outlined above.

Author Response 12 Feb 2025

Borja Lizarribar Carrillo

We provide below a point by point response to reviewer comments:

1. **In the introduction, I would suggest explaining better why reducing the weight/mass of pieces in the aeronautical sector helps mitigate fuel consumption. (I know why but), I think this would allow the reader to focus on that aspect from the start.**

Response: Thank you very much for your comment. An explanation of this fact has been introduced in the introduction.

1. **Please be more careful when using the term weight and mass. We are scientists, they have different meanings. I would suggest using mass everywhere.**

Response: Thank you very much, weight has been changed to mass in the article.

1. **Better discuss the choice of material, even if a reference is provided, we need to know why you chose this material. A LOT of mass could be saved by considering another material, which could remove the need for such an analysis (or not, but we need to know if you considered it).**

Response: In order to explain the material selection, the paper has been changed and the following has been added: "The material selected for these components is Permendur, an iron-cobalt-vanadium alloy. Iron-cobalt alloys are known for their high magnetic saturation, which gives significant advantages in terms of torque density for electrical machines. Furthermore, testers have been manufactured of FeCo and FeSi by Laser Powder Bed Fusion and it has been concluded that FeCo is a better option in the present case in terms of the density achieved and the cracks that occurred in the manufacture of FeSi6.5 alloys **32**. Details regarding material assessment and optimization of process parameters, including thermal treatment, can be found in **32**."

1. **In the introduction, you criticize the lack of a full system entirely 3D-printed but still uses conventional PM and conductors. There are some works in the literature already printing the iron parts, so there are no real improvements regarding this aspect. Please rephrase.**

Response: It is true that work can be found in literature in which iron parts are manufactured via Additive Manufacturing. What we wanted to highlight in the introduction is that there is lack of papers in which the design has been carried out considering that the iron parts of the motor will be manufactured by Additive Manufacturing means. Which has permitted more freedom in the study of motor topologies for the actuator and the design of the active parts. The papers that are found in literature are normally more focused on the materials side and do not explore extensively the advantages that AM brings in terms of geometrical freedom for electrical machines, which has been the main focus of this article. In order to clarify this aspect, the introduction has been modified.

1. **All the depicted shapes have been optimized parametrically in terms of FEA," → this does mean anything. Be more precise or remove this sentence.**

Response: Thanks for your comment, changes have been made in the article in order to be more precise.

1. **Not clear which physics are solved by the FEA. Magnetostatics or other?**

Response: It is mentioned in the paper: "magnetostatic 2D FE simulations in the software

FEMM".

1. **The material types used in the simulation are provided. It would be nice to also provide some actual values like remanence of PM and saturating field for the iron alloys.**

Response: Permanent magnet remanence was not actually measured in the project, but the permendur polarisation saturation was, J_S = 2.26 T. The remanence specified by the supplier of the PM was 1.08-1.10 T. In case it is useful for you I attach the B-h curve measured in the permendur material.
B-h curve figure attachment link: https://s3-eu-west-1.amazonaws.com/openreseurope/linked/246983.17752-_B-h_Curve_figure-_Comment_response.png
In any case, to have more information available for the reader, properties of the materials have been added in Table 2.

1. **When stating "In order to better compare the two remaining dispositions, namely the radial flux surface-mounted magnet outer and inner rotor configurations, a preliminary mechanical design has been sketched for both topologies, leading to the results in terms of weight and machined parts gathered in Table 3." → please add the corresponding letters in from Figure 2 and 3 for clarity.**

Response: Done, thanks.

1. **It seems that many of the topologies could have been discarded prior to the analysis. The ease of automatic winding and issues coming from the Halbach arrangement could have been known prior to that → why still considering them?**

Response: Very true, but the Topic Manager concerns on automatic winding and Halbach configuration came after the assessment of the electrical machine topologies has been done in the project.

1. **More details are needed for the thermal "check". We don't know how this has been performed, how was the temperature monitored, was it a realistic case? Was it performed with everything assembled or just the stator by itself? Which "cooling conditions", natural convection? → if so we need to know the environment or integration. This is even more critical as the considered topology is an outer rotor configuration which can be more demanding it terms of thermal management.**

Response: More details have been given in the article about this topic. The check has been done to a stator "dummy" and it is true that the conditions when it is mounted will be more demanding. However, we considered that due to the maximum temperature achieved, 90 ºC starting from 52 ºC, far from the maximum of 120 ºC, and the lower power consumption, 113 W, we could decrease the effective length so as to reduce the weight of the motor.

1. **In Figure 4, it would be nice to add some sizes to better grasp the footprint of the actuator → this helps estimate if manufacturing is realistic. A view of the magnetic flux density distribution would also help estimate if the EM design is properly done (saturated regions).**

Response: Both things have been added in Figure 4.

1. **In the topology optimization part 2.3.2, it is not clear if there has been a constraint on the part stiffness or not? How do you ensure not having the trivial solution of a completely empty part? → what are the constraints to the optimization problem?**

Response: There has not been a constraint on the part stiffness. To ensure not having the trivial solution you mention we have defined some parts as frozen, so they cannot be removed in the optimisation. These frozen parts are shown in the Figure 6, and they will require at least one mesh element around these zones. No additional constraints were considered. However, this assumption has led to very thin walls at this part that afterwards have been widened as it explained in the article.

1. **Figure 7 does not present much information, some "cut-view" could better help visualizing the newly generated design.**

Response: Thanks for your comment, a cut-view of the stator TO has been added in Figure 7.

1. **Most of the modifications proposed in 2.3.3 part could have been integrated within the TO if explored more deeply. Changing so many things after the optimization makes me question the usefulness of such an approach. Considering such constraints beforehand could have maybe resulted in a very different topology.**

Response: Perhaps the article tries to show the project's chronology the way they were, but it is true a better approach could have been taken in the mechanical TO.

1. **It would be nice to know which insulating resin has been used. This would affect the thermal properties too.**

Response: Ther resin used was epoxy class H.

1. **How is this motor driven? Are there some Hall sensors?**

Response: The actuator incorporates a brake and a resolver in the non-drive end as illustrated in Figure 1.

1. **Page 11, there is a typo just before the 3.2 part. "it has to be pointed out hat the torque [...]", it should be "it has to be pointed out that the torque". Please pass over the whole manuscript to avoid such mistakes. There are many free tools that can help you with that ...**

Response: Thanks, the typo has been corrected and the whole paper cross-checked for mistakes.

1. **It is said that the pre-existing solution was heavier but precised how much. It would help better appreciate the improvement.**

Response: We are sorry but we are not able to share this information due to confidentiality imposed by the topic manager.

1. **In the conclusion: "Not only the geometric freedom offered by AM, but also the possibility of producing dual-function parts, electromagnetic and mechanical, ". Maybe I missed a part but this does not like being the case to me. It seems that you removed all of the parts strongly contributing to the EM performances from the mechanical analysis.**

Response: That was not exactly what we meant. What we meant was that a manufacturing process (L-PBF) has been used to produce parts that integrate electromagnetic parts (rotor and stator) with structural parts capable of transmitting torque and providing mechanical stability. In a traditional manufacturing process, the soft magnetic parts are usually produced by lamination and additional mechanical parts are required to transmit the torque and ensure mechanical stability. With AM, we have been able to integrate these two parts, reducing the number of parts to be manufactured and the number of joints between parts.

Competing Interests: No competing interests were disclosed.

Reviewer Report 05 September 2024

https://doi.org/10.21956/openreseurope.19192.r42571

© 2024 Ma C. This is an open access peer review report distributed under the terms of the Creative Commons Attribution License, which permits unrestricted use, distribution, and reproduction in any medium, provided the original work is properly cited.

?

Chi Ma
Chongqing University, Chongqing, Chongqing, China

Review Comments
Overall Evaluation: This paper presents a detailed study on the design and additive manufacturing of a lightweight aerospace electric actuator. The topic is innovative, particularly in the integration of topology optimization and additive manufacturing in lightweight design, showcasing cutting-edge technologies in this field. However, there are areas in certain key technical details where the paper could be further improved.
Strengths:

1. **Innovative Design Approach:** The paper demonstrates an innovative approach by combining topology optimization with additive manufacturing, showing significant potential in lightweight design and its application in electric actuators.
2. **Detailed Experimental Validation:** The paper provides comprehensive experimental results that validate the feasibility and effectiveness of the design approach, especially in balancing weight reduction and structural integrity.

Technical Comments:

1. **Integration of Performance Optimization with Weight Reduction:**
    - The paper primarily focuses on the goal of weight reduction through topology optimization, but it lacks detailed discussion on how to simultaneously optimize motor performance (e.g., output torque, efficiency, thermal management). While weight reduction can enhance the lightweight characteristics of the motor, it may lead to performance degradation or instability if electromagnetic performance is not adequately considered.
    - It is recommended that the authors more closely integrate motor performance optimization with the goal of weight reduction during the topology optimization process. For instance, a multi-objective optimization approach could be employed, where performance indicators (such as torque density, losses, and temperature rise) are included as constraints or objective functions alongside structural weight. This would ensure that the design achieves weight reduction without significantly compromising motor performance.
2. **Details on Electromagnetic Design:**
    - Although the paper compares different motor topologies, it provides limited discussion on the detailed behavior of each topology under various operating

conditions (e.g., different speeds or loads). The authors are encouraged to further explore the differences in electromagnetic characteristics under these conditions, particularly in terms of induced electromotive force, loss characteristics, and efficiency.

3. **Thermal Management and Heat Dissipation Analysis:**
    - It is suggested to supplement or expand the discussion on heat flux density, thermal resistance network models, and potential localized overheating phenomena in actual operation to ensure that the optimized design maintains reliability under extreme conditions.
4. **Limitations of Topology Optimization:**
    - While topology optimization effectively reduces component weight, the paper mentions that some ultra-thin structures may be difficult to manufacture. It is recommended to further analyze the dynamic performance of the optimized structure during actual operation (such as vibration response and modal analysis) and explore potential improvement measures.

Conclusion and Recommendations: Overall, this paper provides valuable insights into the design and manufacturing of aerospace electric actuators. However, there is room for improvement in the integration of design methods, particularly in combining performance optimization with weight reduction. The authors are encouraged to conduct major revisison based on the above technical comments to further enhance the research content.

Is the work clearly and accurately presented and does it cite the current literature?
Partly

Is the study design appropriate and does the work have academic merit?
Partly

Are sufficient details of methods and analysis provided to allow replication by others?
Partly

If applicable, is the statistical analysis and its interpretation appropriate?
Partly

Are all the source data underlying the results available to ensure full reproducibility?
Partly

Are the conclusions drawn adequately supported by the results?
Partly

Competing Interests: No competing interests were disclosed.

Reviewer Expertise: Topology optimization, intelligent design and optimization

I confirm that I have read this submission and believe that I have an appropriate level of expertise to confirm that it is of an acceptable scientific standard, however I have significant reservations, as outlined above.

Author Response 12 Feb 2025

Borja Lizarribar Carrillo

e provide below a point by point response to reviewer comments::

1. **The paper primarily focuses on the goal of weight reduction through topology optimization, but it lacks detailed discussion on how to simultaneously optimize motor performance (e.g., output torque, efficiency, thermal management). While weight reduction can enhance the lightweight characteristics of the motor, it may lead to performance degradation or instability if electromagnetic performance is not adequately considered.**

Thank you for your comments. It is true that the optimisation of the electrical machines does not take into account simultaneously the different physics affecting the machine performance, thermal, electromagnetic and mechanical. A further analysis of the topologies studied would require the simultaneous optimisation of the electromagnetic-thermal-mechanical physics. In any case, the objective of the European project and the article was not to find a global optimum solution, but to explore the benefits that additive manufacturing can bring to the design of actuators.

1. **It is recommended that the authors more closely integrate motor performance optimization with the goal of weight reduction during the topology optimization process. For instance, a multi-objective optimization approach could be employed, where performance indicators (such as torque density, losses, and temperature rise) are included as constraints or objective functions alongside structural weight. This would ensure that the design achieves weight reduction without significantly compromising motor performance.**

As it has been said for the previous comment, we agree that integrating different physics in the topology optimisation would have been the best option to achieve a globally optimised design without compromising motor performance. However, this was not the objective of the project or the paper.

1. **Although the paper compares different motor topologies, it provides limited discussion on the detailed behavior of each topology under various operating conditions (e.g., different speeds or loads). The authors are encouraged to further explore the differences in electromagnetic characteristics under these conditions, particularly in terms of induced electromotive force, loss characteristics, and efficiency.**

Thank you for your comment. The requirements of the project were only those relating to nominal torque, maximum DC consumption and weight. There were no requirements for different speeds or loads. Moreover, the operation of this motor is quasi-static and the losses are mainly those generated in the stator copper, with the exception of the losses associated with the ripple of the current converter, for which no data were available, but with an estimated switching frequency of over 40 kHz. In this case, the study of the different configurations for partial loads is not very interesting, while the losses vary in proportion to the square of the current. In case you find it interesting, we attach here the back EMF estimated by the FEA simulation of the 4 cases that reach the requirement of 8 Nm. The speed considered for these models is 400º/s and the specific candidates shown for each configuration are those that achieve 8 Nm with the defined maximum DC power consumption. It is interesting to note from this graph that while all the electromagnetic parameters have not been considered in the optimisation, high amplitude harmonics can be

seen in the back EMF waveform of the external rotor configuration.

https://s3-eu-west-1.amazonaws.com/openreseurope/linked/246467.17752-Author_response_to_Reviewer__Chi_Ma_v1.pdf

1. **It is suggested to supplement or expand the discussion on heat flux density, thermal resistance network models, and potential localized overheating phenomena in actual operation to ensure that the optimized design maintains reliability under extreme conditions.**

Thank you for your comment. We have added a thermal analysis from MotorCAD® before section 2.3 showing the average and hotspot of the copper winding. Two figures, Figures 12 and 13, of the thermal model used in the study have been included.

1. **While topology optimization effectively reduces component weight, the paper mentions that some ultra-thin structures may be difficult to manufacture. It is recommended to further analyze the dynamic performance of the optimized structure during actual operation (such as vibration response and modal analysis) and explore potential improvement measures.**

While the operation of the electric machine design is quasi-static, not dynamic, there were not requirements in terms of vibration response, thus no structural dynamic analysis has been done.

1. **Overall, this paper provides valuable insights into the design and manufacturing of aerospace electric actuators. However, there is room for improvement in the integration of design methods, particularly in combining performance optimization with weight reduction. The authors are encouraged to conduct major revisison based on the above technical comments to further enhance the research content.**

Thank you very much, we have tried to respond all your concerns.

Competing Interests: No competing interests were disclosed.

Reviewer Report 30 August 2024

https://doi.org/10.21956/openreseurope.19192.r43295

© 2024 Demir U. This is an open access peer review report distributed under the terms of the Creative Commons Attribution License, which permits unrestricted use, distribution, and reproduction in any medium, provided the original work is properly cited.

?

Uğur Demir
Marmara University, Istanbul, Turkey

Dear Author,

I think the manuscript is acceptable because the manuscript is comprehensive manner and it provides novelty. Therefore it contributes to literature. However, the results of the study should improve with a comparison of a shelf product which is similar according to the requirements.

Furthermore, the design optimization techniques for the actuator should be discussed. Besides, topology optimization is dealt with the design of experiments in terms of the parametric design and objectives.

This paper presents design optimization of additive manufacturing-based actuator considering the lightweight requirements for aerospace. In terms of the design requirements, the topology optimization for the actuator is dealt with. Besides, 3 different prototypes are performed. The study is completed with comparative analysis. In conclusion, the paper presents 20% reduction for lightweight.

References

1. Demir U: Improvement of the power to weight ratio for an induction traction motor using design of experiment on neural network. *Electrical Engineering*. 2021; **103** (5): 2267-2284 Publisher Full Text
2. Kocabicak Z, Demir U: Design and optimization of an electromechanical actuator for the latch of a foldable vehicle seat. *Materials Testing*. 2020; **62** (7): 749-755 Publisher Full Text
3. Demir U, Kocabıçak Z: Performance assessments of the material for the traction motor cores of an electric racing kart. *Materials Testing*. 2021; **63** (6): 519-528 Publisher Full Text
4. DEMİRCİ B, DEMİR U, AKGÜN G, YILDIRIM A, et al.: Multi System Level Driving Scenarious Based Topology Optimization of Bracket Design for 2 DoF Vehicle Simulator. *International Journal of Automotive Science and Technology*. 2023; **7** (3): 248-258 Publisher Full Text
5. Demir U, Akgün G, Kocaoğlu S, Okay M, et al.: Comparative Design Improvement of the Growing Rod for the Scoliosis Treatment Considering the Mechanical Complications. *IEEE Access*. 2023; **11**: 40107-40120 Publisher Full Text
6. Demir U, Ehsani M, Demir P, Akıncı T: Intelligent Design Optimization for Traction and Steering Motors of an Autonomous Electric Shuttle under Driving Scenarios. *Electronics*. 2024; **13** (3). Publisher Full Text

Is the work clearly and accurately presented and does it cite the current literature?
Yes

Is the study design appropriate and does the work have academic merit?
Yes

Are sufficient details of methods and analysis provided to allow replication by others?
Yes

If applicable, is the statistical analysis and its interpretation appropriate?
Not applicable

Are all the source data underlying the results available to ensure full reproducibility?
Yes

Are the conclusions drawn adequately supported by the results?
Partly

Competing Interests: No competing interests were disclosed.

Reviewer Expertise: UĞUR DEMİR received the Ph.D. degree in mechatronics engineering from Marmara University, in 2018. He is currently an Associate Professor with the Department of Mechatronics Engineering, Marmara University. He has extensively worked on the development of novel electrical machine technologies and the actuator for electric vehicle traction operations and mechatronics systems. His research interests include the electromagnetic design of electrical machines, design optimization, artificial neural network applications, autonomous driving, and advanced driving technologies.

I confirm that I have read this submission and believe that I have an appropriate level of expertise to confirm that it is of an acceptable scientific standard, however I have significant reservations, as outlined above.

Author Response 12 Feb 2025

Borja Lizarribar Carrillo

We provide below a point by point response to reviewer comments:

Reviewer: "the results of the study should improve with a comparison of a shelf product which is similar according to the requirements"
Author Response: The additively manufactured design has been done in order to improve an already existing product, and it is lighter comparing to it. However, the topic manager does not allow to share this information of the previous design.

Reviewer: " the design optimization techniques for the actuator should be discussed"
Author Response: Thank you for your comment. There are countless design optimisation techniques that are applied to electrical machines, as can be seen in [1]. However, in our experience, the results obtained after the optimisation are not only dependent of the optimisation used but also in the size of population, the initial population... In the case analysed in the paper, a Multi Objective Differential Evolution algorithm has been used due to the simplicity and robustness of this method. Moreover, this optimisation method has been widely used in electrical machine optimisation as it can be seen in [2]-[4]. In order to clarify this aspect, the article ha been modified to highlight the fact that more optimisation methods are available in literature, and the reason why MODE has been used in this study.

Reviewer: topology optimization is dealt with the design of experiments in terms of the parametric design and objectives.

Author Response: We are sorry but we do not fully understand this remark. In case it is useful, we have optimised parametrically the electromagnetic design, only the active parts of the electric motor, and topology optimisation has been applied only to the mechanical parts, having the electromagnetic function parts frozen in this optimisation. This is explained in the paper in section 2.2 and 2.3.2.

References 1 V.S., N., Mahadevan, B., V., K., R., A., Nagarajan, G., S., S. and M., S. (2017), "Design optimization of ferrite assisted synchronous reluctance motor using multi-objective differential evolution algorithm", COMPEL - The international journal for computation and

mathematics in electrical and electronic engineering, Vol. 36 No. 1, pp. 219-239. https://doi.org/10.1108/COMPEL-06-2016-0253 2 Alotto, P. (2011), “A hybrid multiobjective differential evolution method for electromagnetic device optimization”, COMPEL: The International Journal for Computation and Mathematics in Electrical and Electronic Engineering, Vol. 30 No. 6, pp. 1815-1828. 3 Cupertino, F., Pellegrino, G. and Gerada, C. (2014), “Design of synchronous reluctance motors with multiobjective optimization algorithms”, IEEE Transactions on Industrial Applications, Vol. 50 No. 6, pp. 3617-3627. 4 Gamba, M., Pelegrino, G. and Cupertino, F. (2014), “Optimal number of rotor parameters for the automatic design of synchronous reluctance machines”, proceedings of the 2014 International Conference on Electrical Machines (ICEM), Berlin, pp. 1334-2134.

Competing Interests: No competing interests were disclosed.