Check for updates

RESEARCH ARTICLE

REVISED Microhomology-mediated end-joining Knock-In approaches to delete the allergenic domain of trout *parvalbumin beta-1*. Preliminary results in F0 animals and feedback

[version 2; peer review: 2 approved, 1 approved with reservations]

Veronique Lebret, Cecile Duret, Amaury Herpin, Pierre-yves Rescan

LPGP Fish Physiology and Genomics, Institut National de Recherche pour l'Agriculture l'Alimentation et l'Environnement Centre Bretagne-Normandie, Rennes, Brittany, 3542, France

v2 **First published:** 25 Oct 2024, **4**:235
https://doi.org/10.12688/openreseurope.18223.1
Latest published: 25 Feb 2025, **4**:235
https://doi.org/10.12688/openreseurope.18223.2

Abstract

Background

Gene editing techniques offer new opportunities to improve important traits in aquaculture. The allergenicity of fish flesh is a major problem in aquaculture. Parvalbumin (Parv) is the most prevalent fish allergen. For instance, in salmonids, a single parvalbumin beta-1 protein (parvb1) has been identified as an allergen in specific patients. Therefore, generating trout carrying two parvb1 alleles deleted from the allergenic peptide-encoding region could prevent allergies in these sensitive individuals.

Methods

Here, we describe the application of the Crispr/cas9 system in an attempt to delete parvb1 exon 2 encoding the allergenic peptide and, alternatively, to replace exon 2 of parvb1 with exon2 of parvalbumin beta-2 protein (parvb2,) which does not encode the allergenic peptide. Exon skipping and swapping were pursued through microhomology-mediated end-joining (MMEJ) knock-In using specifically designed double-stranded donor DNA.

Results

Genotyping of approximately 200 F0 fingerlings originating from eggs

Open Peer Review

Approval Status ? ✓ ✓

	1	2	3
version 2 (revision) 25 Feb 2025		✓ view	✓ view
version 1 25 Oct 2024	? view	? view	? view

1. **Jitendra Kumar Sundaray**, ICAR-Central Institute of Freshwater Aquaculture, Bhubaneswar-751002, Odisha,, India
2. **Qing Xiong**, The Hong Kong Polytechnic University, Hong Kong, Hong Kong
3. **Joana Costa**, University of Porto, Porto, Portugal
REQUIMTE LAQV Porto, Porto, Portugal

Any reports and responses or comments on the article can be found at the end of the article.

injected with donor DNA designed for exon 2 skipping led to the identification of only one animal carrying an allele lacking exon 2. Genotyping of approximately 150 fingerlings originating from eggs injected with donor DNA for exon 2 swapping did not result in any trout carrying the expected modified allele.

Conclusions

These preliminary results indicate the potential difficulties associated with the MMEJ KI experiments performed in farmed fish. Finally, new genomic techniques in aquaculture are further discussed in the context of lively debates taking place in the European parliament regarding a possible revision of the current law that determines the legal status of farm animals modified by genome editing.

Plain language summary

Unlike transgenesis, new gene-editing technologies allow site-specific genetic changes. These new technologies can be used either to invalidate a targeted gene or to precisely modify the nucleotide sequence of a gene of interest, allowing, for example, production of a reshaped protein. As such, gene editing may become a popular technique for developing new phenotypic traits of interest in farmed animals, especially in aquaculture species. Parvalbumin is a major allergen in fish. Conceptually, a simple way to suppress fish allergies would be to inactivate the gene encoding the allergen. However, due to its role in calcium binding, the complete knockout of parvalbumin could have major detrimental impacts on animal physiology, particularly with respect to muscle calcium signalling and contraction. Previous research has shown that only a small domain of the trout parvalbumin beta-1 protein is allergenic. Thus, a way to suppress fish allergies without affecting muscle physiology could be to remove, replace, or modify the allergenic domain of the protein through targeted modifications of the parvalbumin gene. In this study, we describe two CRISPR/Cas9-based editing strategies to generate trout with parvalbumin beta-1 alleles lacking an allergen-encoding subdomain. Although such a procedure could be considered as technically trivial, the success rate was at the end found to be very low. This suggests, at least in fish, that complex gene editing strategies definitely need further improvements before being routinely employed as popular procedures for engineering desirable phenotypic traits by means of allele modifications.

Keywords

Gene editing, microhomology-mediated end joining Knock-In, parvalbumin, allergenicity, trout, Genetically modified organisms (GMOs).

H2020 This article is included in the Horizon 2020 gateway.

Corresponding author: Pierre-yves Rescan (pierre-yves.rescan@inrae.fr)

Author roles: Lebret V: Investigation, Methodology, Visualization; **Duret C**: Investigation, Methodology; **Herpin A**: Conceptualization, Investigation, Methodology, Writing – Review & Editing; **Rescan Py**: Conceptualization, Funding Acquisition, Investigation, Methodology, Project Administration, Supervision, Visualization, Writing – Original Draft Preparation, Writing – Review & Editing

Competing interests: No competing interests were disclosed.

Grant information: This project has received funding from the European Union's Horizon 2020 Research and Innovation Programme under grant agreement No. 871108 and TUNESAL Robust Atlantic Salmon Through Fine-Tuned Genome Editing (Research Project-HAVBRUK2, PN: 294971).
The funders had no role in study design, data collection and analysis, decision to publish, or preparation of the manuscript.

Copyright: © 2025 Lebret V *et al*. This is an open access article distributed under the terms of the Creative Commons Attribution License, which permits unrestricted use, distribution, and reproduction in any medium, provided the original work is properly cited.

How to cite this article: Lebret V, Duret C, Herpin A and Rescan Py. **Microhomology-mediated end-joining Knock-In approaches to delete the allergenic domain of trout *parvalbumin beta-1*. Preliminary results in F0 animals and feedback [version 2; peer review: 2 approved, 1 approved with reservations]** Open Research Europe 2025, **4**:235 https://doi.org/10.12688/openreseurope.18223.2

First published: 25 Oct 2024, **4**:235 https://doi.org/10.12688/openreseurope.18223.1

REVISED **Amendments from Version 1**

We have changed Figure 2 of the manuscript as requested. Specifically, we have added PCR results obtained with wild type DNA samples and modified Figure 2 legend accordingly. In the paragraph "Screening for mutations" of the "methods" section, we mentioned that gel electrophoresis of PCR products is suitable to uncover alleles resulting from exon 2 skipping or swapping but did not reveal unwanted alleles mutations corresponding to small indels. Also, more insights concerning the functional domains encoded by exon2 of parvb1 and parvb2 genes are now provided in the manuscript. At last, the discussion section of the revised manuscript details the general context of our work and presents future research axis in relation with the possible evolutions of our research that includes allergenicity assessment of flesh extracts from genome edited trout displaying parvb1 exon2 skipping or swapping.

Any further responses from the reviewers can be found at the end of the article

Introduction

Aquaculture has become a type of animal food production with the fastest growth in recent decades[1]. Fish are among the most important groups of allergenic foods worldwide[2,3]. Allergic reactions result in sensitized consumers from an excessive IgE-mediated response of the immune system against specific proteins called allergens. The major allergen responsible for fish allergies in humans is parvalbumin[4]. Parvalbumins are heat-stable intracellular EF-hand proteins involved in muscle relaxation via calcium buffering[5]. Unfortunately, the development of specific immunotherapeutics for preventing fish allergies is limited. As a result, prophylactic management of this allergy relies only on the elimination of fish products from the diet of sensitized patients[4]. In salmonids, a single parvalbumin-beta1 protein was identified as an allergen in some patients[4]. Conceptually, a simple way to suppress trout allergy is to inactivate the gene encoding parvb1. Nevertheless, one cannot rule out the possibility that the invalidation of parvb1 might prevent fish development and/or affect muscle physiology. Consistent with this remark, we observed that crossbreeding of two distinct trout (F1) lines carrying one null parvb1 allele did not lead to the generation of homozygous F2 mutants (Lebret *et al.*, unpublished data). Given that parvb1 exon 2 encodes an allergenic peptide[4], we aimed to generate Parvb1 alleles that specifically lack this exon. To this end, we attempted to perform exon 2 skipping and swapping by applying microhomology-mediated end-joining (MMEJ) knock-in, a process that facilitates the insertion of donor DNA flanked by a small region (approximately 25nt) homologous to the Crispr target site[6,7].

Methods

Animals

All experiments reported in this study were performed on rainbow trout Oncorhynchys mykiss (walbaum, 1792).

Guide RNA (gRNA) design and synthesis

The guide RNA design was performed using the Crispor tool (http://crispor.tefor.net/), which identifies gRNAs, evaluates potential off-targets, and predicts on-target activity, and was based on scanning of the trout genome which has been sequenced, assembled and annotated[8]. gRNAs and *cas9* mRNA were prepared as previously described[9]. Briefly, the DR274 vector (Addgene #42250) containing the universal guide RNA sequence was linearized with Bsa1 and purified. PCR amplifications were performed using linearized DR274 as a template and specific primers for each sgRNA.Forward primers containing sgRNA target sequences (bold and underlined) between the T7 promoter sequence at the 5' end and the conserved tracrRNA domain sequence were as follows: forward primer (#site 1), 5' GAAATTAATAC-GACTCACTATA **GGAGGGGGAAGTAAACGAACT** GTTT-TAGAGCTAGAAATAGCAAG-3'. Forward primer (#site 2): 5'-GAAATTAATACGACTCAC TATA **GGTACGAAACATAG-CATACAG**TTTTAGAGCTAGAAATAGCAAG-3'; universal Reverse primer: 5'-AAAAGCACCGACTCGGTGCCACT-3'. Subsequently, the residual plasmid was digested using Dpn1. The final product was purified and used as the DNA template for transcription. sgRNAs were transcribed using the MegaShortScript T7 Transcription Kit (Ambion (cat. AM1354)) according to the manufacturer's instructions. The double-stranded templates (Figure 1B and Figure 4B) added to the injection mix for MMEJ Knock-In experiments were provided by GeneStrand Synthesis, Eurofin Genomics.

Preparation of embryos and microinjection

Trout eggs were collected by gentle manual stripping under anesthesia (2-phenoxyethanol, 0.05%). The eggs were then fertilized by careful mixing with the sperm solution. For microinjection, a mixture containing gRNA (100ng/µl), cas9 mRNA (200ng/µl) and double-stranded donor DNA (10 ng/µl) was prepared and microinjected using a FemtoJet (Eppendorf) microinjector during a period of 2 to 6 h after egg fertilization (one cell stage prior to the first cleavage). Once injected, embryos were transferred to hatchery trays and incubated in running water (10°C) until first feeding (65 dpf). Subsequently, the fingerlings were transferred into indoor tanks.

Screening for mutations

Genotyping was performed using genomic DNA extracted from the fin tissue of 70 dpf fingerlings. Specifically, fingerlings were anesthetized in 2-phenoxyethanol (0.5 ml/L) and a small part ($2mm^2$) of the caudal fin was clipped. Fin-clip samples were then incubated in 100 µl of 5% Chelex 100 Molecular Biology Grade resin (BioRad (cat.1421253)) and 50 µl of proteinase K solution (20mg/ml, Ambion (cat. AM2546)) for 2 h at 55°C and then for 10 min at 99°C with continuous stirring. After centrifugation at 5000 g for 10 min, the supernatant was collected and subsequently used for PCR. PCR reactions were performed taking one µl (~ 100 ng) of extracted genomic DNA and using the jumpstart Taq DNA polymerase (Sigma (cat. D9307)), the PCR nucleotide mix from Promega (cat. C1145) and Parvb1 gene specific primers (Eurofins genomics) at 10µM each. For the exon skipping experiment, PCR was performed using the forward primer 5'-CAATGCTCAATACCGAACGTTGA-3' and the reverse primer 5'-AGAGGCAGTAGTGATGACCAG-3' present in parvb1 exon1 and intron3 (Figure 1A), respectively. For the exon swapping experiment, PCR was performed using the forward primer 5'-CAATGCTCAATACCGAACGTTGA-3' present in parvb1

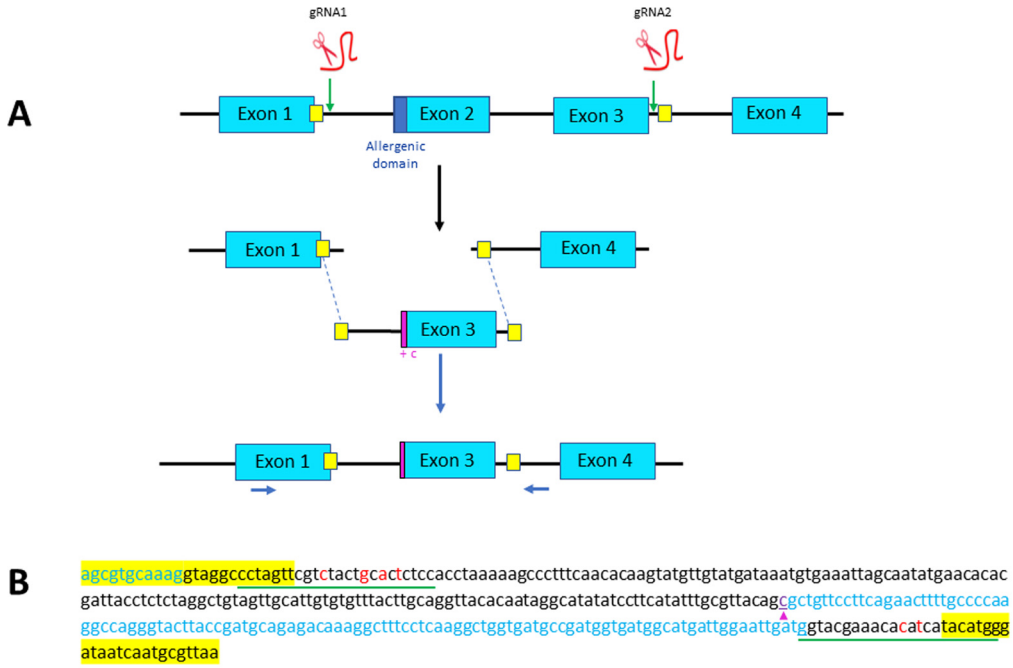

Figure 1. Strategy designed for Exon 2 skipping through microhomology-mediated end joining (MMEJ). (**A**) Exons 2 and 3 of parvb1 locus are excised using two gRNAs, one (gRNA1) located in the intron between exons 1 and 2, and one (gRNA2) in the intron between exons 3 and 4. The two cutting-sites targeted by the gRNAs are flanked by short sequence (yellow squares) that are added as homology arm at the 5′ and 3′ ends of the donor DNA (containing only parvb1 exon 3) to be inserted. Position of primers used for PCR screening are indicated (blue arrows). (**B**) Nucleotide sequence of the donor DNA used for exon skipping. The short homology arms are highlighted in yellow. The gRNA sites of the donor DNA (underlined in green) have been slightly modified (red letters) to prevent cas9-mediated re-cutting of the donor DNA after its integration into parvb1 locus. A cytosine (purple arrowhead) has been added at the 5′ extremity of exon 3 to keep the reading frame of exon 1.

exon1, the reverse primer 5'-AGAGGCAGTAGTGATGACCAG-3' present in parvb1 intron3 and the reverse primer 5'-TCCTCAATGAAGCCACTCTTG-3' specifically present in parvb2 exon 2 (Figure 4A). The PCR cycling conditions were as follows: 95°C for 5 min and 35 cycles of 95°C for 15 s, 60°C for 30s, and 72°C for 30 s. The reaction products were separated and visualized using agarose gel electrophoresis. Of note, gel electrophoresis of PCR products was appropriate to uncover alleles resulting from exon2 skipping or swapping but did not reveal unwanted allele displaying small indel-associated mutations. PCR products of interest were further sequenced by the Eurofins Genomics Sequencing Service (https://www.eurofinsgenomics.eu).

Results

Exon 2 skipping

Parvb1 is composed of four exons (Figure 1A). The 5' subdomain of exon 2 encodes the allergenic peptide, whereas the 3' subdomain of exon 2, along with the 5' subdomain of exon 3, encode one of the two EF-hand motifs involved in calcium binding. The 3' subdomain of exon 3 along with exon 4 encode the second EF-hand motif[4]. Exons 1 and 3 of parvb1 are not in frame, so a single excision of exon 2 followed by NHEJ would not result in appropriate splicing of the remaining exons. Therefore, to perform correct exon 2 skipping, we sought to delete both exon 2 and exon 3 using gRNA1 and gRNA2 (Figure 1A) which displayed reliable activity when injected independently into zygotes, and to elicit, at the cutting sites, the integration of an injected donor DNA containing parvb1 intron 1, exon 3 (with an additional nucleotide immediately following the splice acceptor site to maintain the reading frame of exon 1), and the 5' domain of intron 3 (Figure 1 A and B). The donor DNA was flanked by short homology arms for proper insertion through microhomology-mediated end joining (MMEJ). Out of approximately 600 fertilized eggs injected to achieve exon2 skipping, only 191 developed up to the fingerling stage (approximately 70 d post-fertilization). The fingerlings were genotyped using appropriate primers (Figure 1A). In most cases, only one PCR band corresponding to the wild-type allele was found in fingerlings. Truncated alleles of various sizes were sometimes observed (10 fingerlings out of 191) in addition to the wild-type allele (Figure 2). Only one individual exhibited, in addition to the wild type allele, a truncated allele which size was compatible with a correct insertion of donor DNA (Figure 2). Sequencing of this allele confirmed the correct insertion of donor DNA but also revealed a tandem duplication of the 3' microhomology arm in intron 3 (Figure 3). Given its position within the gene, it is unlikely that this tandem duplication would affect the processing of the parvb1 primary transcript. Unfortunately, the premature death of fingerlings carrying this mutation divested the F1 generation for further phenotyping.

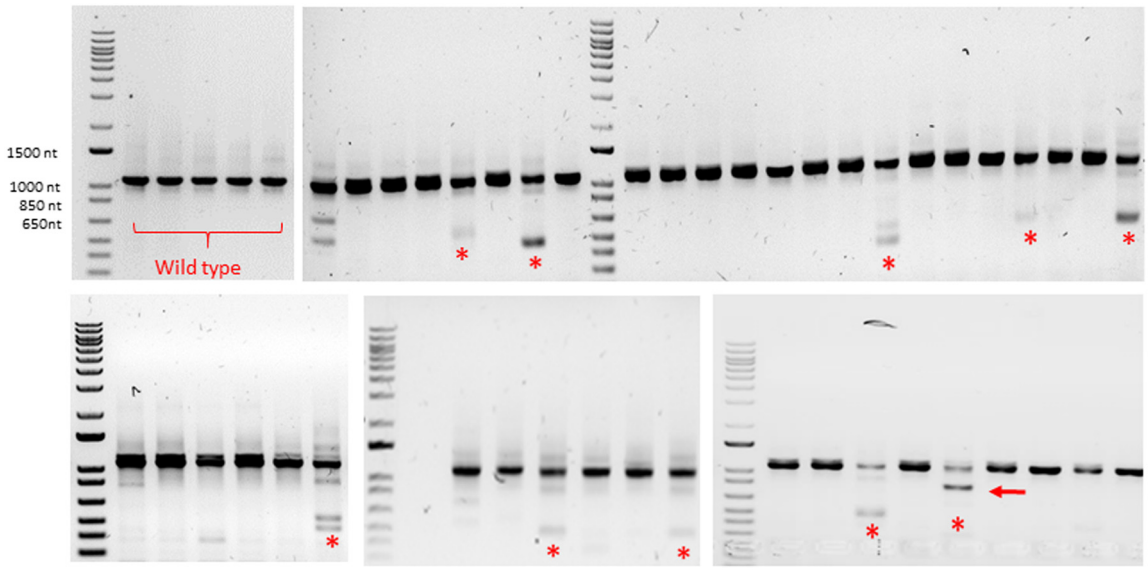

Figure 2. Exon skipping experiment: detection of Crispr/Cas9-introduced mutations by genotyping. Gel electrophoresis of several PCR products. Top left corner (lanes 1-5): wild type trout DNA. Other lanes: DNA from F0 trout originating from eggs injected with donor DNA designed for exon 2 skipping: truncated alleles of various sizes (red stars) were sometimes found in addition to the wild type allele; only one individual displayed an allele carrying a deletion of the expected size (red arrow).

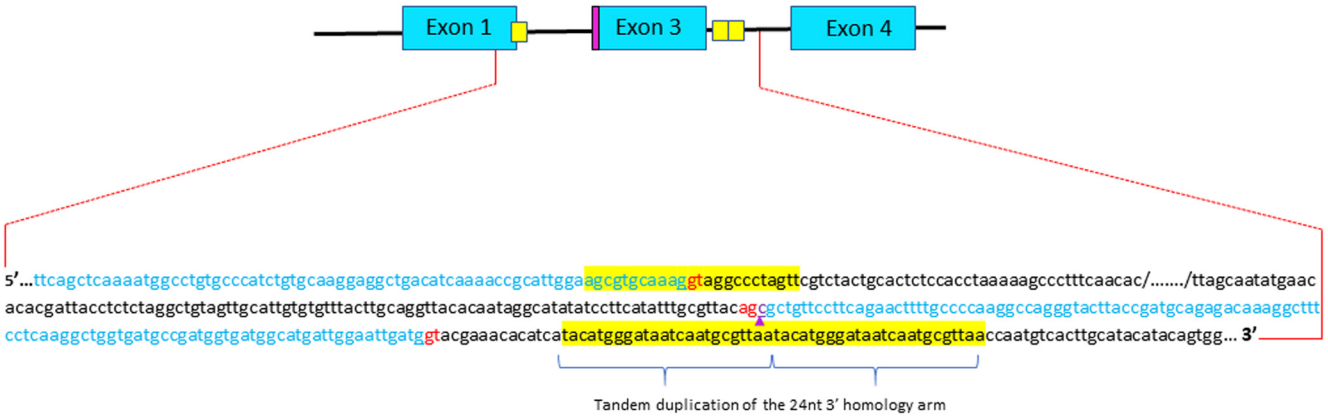

Figure 3. Sequencing analysis of integration junctions of the donor DNA into parvalbumin beta 1 locus in the animal displaying exon2 skipping. Short homology arms are highlighted in yellow. Although the donor DNA is correctly inserted, one can observed a tandem duplication of the 3' short homology arm. The additional cytosine that kept the reading frame of exon 1 is outlined (purple arrow). Donor and acceptor splice sites are in red.

Overall, this study shows that microhomology-mediated end joining can be used to delete exon 2 of parvb1, although the success rate was very low.

Exon 2 swapping

To replace parvb1 exon2 with parvb2 exon2, which does not encode the allergenic peptide, we excised exons 2 and 3 using the same gRNAs employed for parvb1 Exon2 skipping (Figure 1A). Knock- In was carried out using donor DNA containing parvb1 intron 1, parvb2 exon 2, parvb1 intron 2, parvb1 exon 3, and the 5' domain of parvb1 intron 3 (Figure 4 A and B). Short homology arms were added at the extremities of the donor DNA to achieve proper insertion through microhomology-mediated end joining (MMEJ) (Figure 4B). Approximately 500 fertilized eggs were injected, 157 of which developed up to the fingerling stage. These fingerlings were genotyped, but none of them were found to display the correct donor DNA insertion into the parvb1 locus, as shown after genotyping using an internal parvb2 specific primer (Figure 4A). Interestingly, in contrast to our initial exon-skipping experiment, no truncated junk alleles were observed. This second part of our study confirms an apparently intrinsically low incidence for the targeted integration of DNA templates through microhomology-mediated end joining in trout.

Discussion

Parvalbumin beta-1 is a major allergen in the trout. Therefore, the invalidation of parvb1 encoding gene could prevent allergic

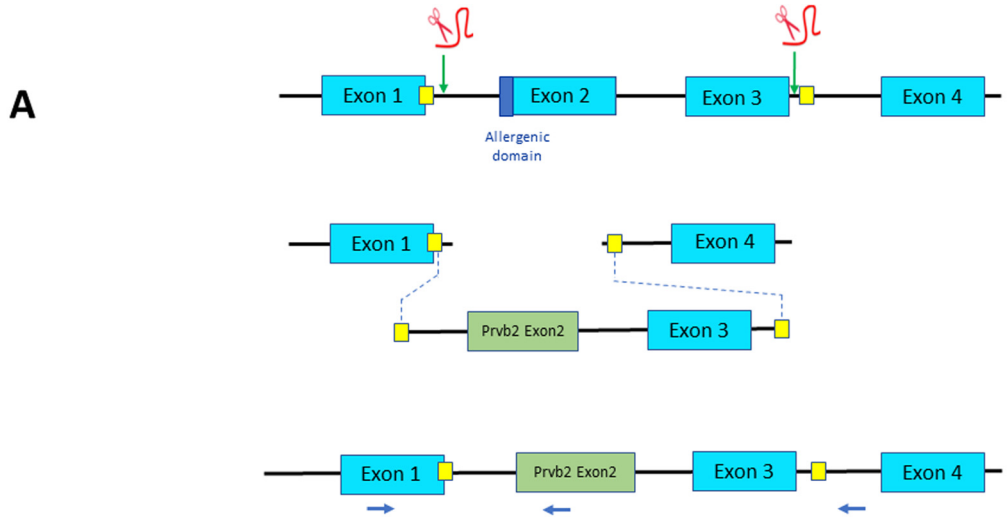

Figure 4. Strategy designed for Exon 2 swapping through microhomology-mediated end joining (MMEJ). (**A**) Exons 2 and 3 of parvb1 locus are excised using two gRNAs, one located in the intron 5′ to exon 2 and one in the intron between exons 3 and 4. The two cutting-sites targeted by the gRNAs are flanked by a short sequence (yellow squares) that are added as homology arm at the 5′ and 3′ ends of the donor DNA (containing parvb2 exon 2 and parvb1 exon 3) to be inserted. Position of primers used for PCR screening are indicated (blue arrows). (**B**) Nucleotide sequence of the donor DNA used for exon 2 swapping. Parvb2 Exon 2 and parvb1 exon 3 are in green and blue letters, respectively. Short homology arms are highlighted in yellow. The gRNA sites (underlined in red) have been slightly modified (red letters) to prevent cas9-mediated re-cutting of the donor DNA after its integration into parvalbumin beta 1 locus.

reactions in sensitive persons. However, one cannot rule out the possibility that knockout of the gene encoding parvb1 could have deleterious developmental and/or physiological effects on the whole animal. In keeping with this point, we were unable to generate homozygous mutants after crossing two distinct F1 lines carrying one null allele (Lebret, unpublished work). Hence, precise engineering that allows the production of active parvb1 specifically deprived of the allergenic domain remains the only possible alternative strategy to suppress fish allergenicity. Given that the allergenic domain of parvb1 is encoded by exon2, our editing strategy was to use the Crispr/cas9 system to generate F0 trout carrying either an allele lacking exon 2 (exon skipping) or displaying the replacement of parvb1 exon 2 with that of parvalbumin beta-2 (parvb2), which does not encode the allergenic peptide (exon swapping). For this purpose, we tested the possibility of inserting specific donor DNA through the microhomology-mediated end-joining pathway (MMEJ). (MMEJ)-based methods are designed to integrate donor DNA into a targeted cutting site of the genome, provided that the donor DNA contains, at its 5' and 3' ends, short arms that are homologous to the sequences flanking the targeted cutting site[6,7]. Building on the work by Paquet *et al.*[10] and feedback from preliminary experiments on medaka (Herpin, unpublished results), we introduced silent CRISPR/cas9 blocking mutations in the guide RNA sequence adjacent to the microhomology arms to prevent re-cutting of the target sequence once the donor DNA has been integrated into the genome. In our study, only one individual (out of 191) displayed exon 2 exon skipping through microhomology-mediated end-joining Knock-In, and not a single animal (out of 157) exhibited exon swapping. The efficiency of the procedure was disappointingly low and clearly below our expectations when compared with the success rate obtained in medaka. Some success has been reported regarding Crispr/cas9-mediated knock-in in farmed fish, such as carp (*Laboeo rohita*)[11] and salmon (*Salmo salar L.*)[12]. Nevertheless, in the first report[11], the two homology arms of the donor DNA to be inserted were considerably longer (800 nt) than those used for MMEJ (20-30nt) and in the second report[12], the sequence to be inserted through microhomology-mediated end-joining Knock-In was very short (<100 nucleotides). Therefore, gene editing to insert any desired sequence in farmed fish genomes needs to be carefully considered. Not only is knock-in efficiency obviously uncertain, but germinal mosaicism in the F0 generation is also important. Being often long, the generation time of farmed fish species (two years for trout) might be an obstacle for producing heterozygous F1 and homozygous F2 lines. Regarding knock-in efficiency, improvements can be made by testing templates of different lengths. The length of the homologous arms, as well as the use of asymmetric donor DNA containing homology arms of different sizes at the 5' and 3' ends, are also parameters that might impact KI

efficiency[13]. Chemical intervention, blocking the NHEJ pathway, and promoting the MMEJ pathway, such as NU7441[14], might also be a suitable approach. Beyond the fact that effective harnessing of MMEJ remains challenging[15], it is important to point out that genome editing using donor DNA is likely to lead, at some point, to uncontrolled and random insertion of the donor DNA into the host genome. To illustrate this aspect, it is worth noting that 60% of trout embryos injected with a donor DNA containing a myosin promoter coupled with GFP cDNA gave rise to F0 individuals displaying mosaic GFP fluorescence in skeletal muscle[16]. Therefore, in addition to potential off-target mutations, animals edited by knock-in are likely to display high rates of unintentional transgene insertions. This highlights the necessity of conducting careful whole-genome sequencing of knock-In farmed animals to limit introgression of the template inserted in non-targeted loci during successive crossings. This implies that gene editing must be performed solely in animals in which the genome has been fully sequenced and annotated. Phenotyping gene-edited animals is an essential step that follows gene modification. If parvb1 knock-in finally became successful to a certain extent, then the next objective would be to prepare muscle extracts from knock-in trout and to test them against sera of specific patients. In keeping with this point, collaborations with allergology laboratories would be particularly valuable for future studies.

In July 2018, the Court of Justice of the European Union delivered a judgement in which it held that organisms modified by genome-editing techniques are genetically modified organisms (GMOs) and fall within the scope of EU legislation on GMOs (see footnote: infocuria Jurisprudence). This judgement, which makes no difference between a gene-edited animal displaying a single base pair substitution and a transgenic animal carrying exotic DNA, is highly disputed, as recently reported by a European commission study concluding that the present legislation is not suitable for new genomic techniques (NGT) and needs some adaptations to follow rapid scientific and technological progress (see footnote: New genomic techniques, European commission study and first reactions). In any event, we believe that revision of the law determining the legal status of gene-edited animals would gain much from a basic distinction between those edited using donor DNA (HDR, MMEJ, etc.) and those edited without donor DNA (NHEJ). The former is potentially transgenic if one posits that the insertion(s) of any donor DNA outside of its natural locus falls under transgenesis. Whether the Crispr/cas9-mediated KI gene should be developed in aquaculture breeding programs depends on consumer acceptance as well as government regulation. There have been lively debates on this point, notably in the European parliament. We believe that our data can contribute to feed debates regarding the feasibility and limitations of CRISPR-mediated knock-Ins in farmed fish, as well as future regulatory actions for their generation and use.

Infocuria jurisprudence :
https://curia.europa.eu/juris/document/document.jsf;jsessionid=C53743C718B8F4A96ADB9AE3840F765A?text=&docid=204387&pageIndex=0&doclang=EN&mode=req&dir=&occ=first&part=1&cid=6190527

New genomic techniques, European Commission study and first reactions:
https://www.europarl.europa.eu/RegData/etudes/BRIE/2021/698760/EPRS_BRI(2021)698760_EN.pdf

Ethical statement

Fish care and sampling were conducted at the INRAE UR1037 fish facilities (DDSP approval D35-238-6) in strict accordance with the European policies and the guidelines of the National Legislation on Animal Care and Use Ethical Committee (Decree No.2013–118, February 1st, 2013; European Directive 2010–63, September 22, 2010). Experimental protocols involving animals were approved by the "Comité Rennais d'éthique pour l'expérimentation animale' (CREEA, ref. APAFIS #31048-2021041509574912V3).

Animal ethics

All efforts were made to prevent fish suffering. In particular, trout eggs used for microinjection were collected by gentle manual stripping of mature anesthetised females. Also, regarding fingerling genotyping, fin tissue sampling was carried out on anesthetised animals according to current standards.

Availability of data and materials

Underlying data

NCBI GenBank: Oncorhynchus mykiss parvb1 artificial allele lacking exon 2, partial sequence. Accession number PQ067334, https://www.ncbi.nlm.nih.gov/search/all/?term=PQ067334

Extended data

Zenodo: - Microhomology-mediated end-joining Knock-In approaches to delete the allergenic domain of trout parvalbumin beta-1. Preliminary results in F0 animals and feedback, https://zenodo.org/records/13804556[17].

DOI: 10.5281/zenodo.13804556

This project contains the following data: Pages of the laboratory notebook containing PCR gel photographs.

Data are available under the terms of the Creative Commons Attribution 4.0 International license (CC-BY 4.0) https://creativecommons.org/licenses/by/4.0/

Reporting guidelines

This study is reported in accordance with ARRIVE guidelines:

DOI: 10.5281/zenodo.13803707[18]

Data are available under the terms of the Creative Commons Attribution 4.0 International license (CC-BY 4.0)

Author contributions

Lebret V: Investigation, Methodology, Visualization; Duret C: Investigation, Methodology; Herpin A: Conceptualization, Investigation, Methodology, Writing-Review and Editing; Rescan PY: Conceptualization, Funding acquisition, Investigation, Methodology, Project administration, Supervision, Visualization, Writing-Original draft, Writing-Review and Editing.

Acknowledgement

Not applicable.

References

1. FAO: **The state of world fisheries and aquaculture-sustainability in action**. 2020.
Publisher Full Text
2. Moonesinghe H, Mackenzie H, Venter C, *et al.*: **Prevalence of fish and shellfish allergy: a systematic review.** *Ann Allergy Asthma Immunol.* 2016; **117**(3): 264–272.e4.
PubMed Abstract | **Publisher Full Text**
3. Sharp MF, Lopata AL: **Fish allergy: in review.** *Clin Rev Allergy Immunol.* 2014; **46**(3): 258–71.
PubMed Abstract | **Publisher Full Text**
4. Kuehn A, Swoboda I, Arumugam K, *et al.*: **Fish allergens at a glance: variable allergenicity of parvalbumins, the major fish allergens.** *Front Immunol.* 2014; **5**: 179.
PubMed Abstract | **Publisher Full Text** | **Free Full Text**
5. Arif SH: **A Ca^{2+}-binding protein with numerous roles and uses: parvalbumin in molecular biology and physiology.** *Bioessays.* 2009; **31**(4): 410–21.
PubMed Abstract | **Publisher Full Text**
6. McVey M, Lee SE: **MMEJ repair of double-strand breaks (director's cut): deleted sequences and alternative endings.** *Trends Genet.* 2008; **24**(11): 529–38.
PubMed Abstract | **Publisher Full Text** | **Free Full Text**
7. Wierson WA, Welker JM, Almeida MP, *et al.*: **Efficient targeted integration directed by short homology in zebrafish and mammalian cells.** *eLife.* 2020; **9**: e53968.
PubMed Abstract | **Publisher Full Text** | **Free Full Text**
8. Berthelot C, Brunet F, Chalopin D, *et al.:* **The rainbow trout genome provides novel insights into evolution after whole-genome duplication in vertebrates.** *Nat Commun.* 2014; **5**: 3657.
PubMed Abstract | **Publisher Full Text** | **Free Full Text**
9. Imarazene B, Du K, Beille S, *et al.*: **A supernumerary "B-sex" chromosome drives male sex determination in the Pachón cavefish, *Astyanax mexicanus*.** *Curr Biol.* 2021; **31**(21): 4800–4809.e9.
PubMed Abstract | **Publisher Full Text** | **Free Full Text**
10. Paquet D, Kwart D, Chen A, *et al.*: **Efficient introduction of specific homozygous and heterozygous mutations using CRISPR/Cas9.** *Nature.* 2016; **533**(7601): 125–9.
PubMed Abstract | **Publisher Full Text**
11. Chakrapani V, Patra SK, Panda RP, *et al.*: **Establishing targeted carp TLR22 gene disruption via homologous recombination using CRISPR/Cas9.** *Dev Comp Immunol.* 2016; **61**: 242–7.
PubMed Abstract | **Publisher Full Text**
12. Straume AH, Kjærner-Semb E, Ove Skaftnesmo K, *et al.*: **Indel locations are determined by template polarity in highly efficient *in vivo* CRISPR/Cas9-mediated HDR in Atlantic salmon.** *Sci Rep.* 2020; **10**(1): 409.
PubMed Abstract | **Publisher Full Text** | **Free Full Text**
13. Richardson CD, Ray GJ, DeWitt MA, *et al.*: **Enhancing homology-directed genome editing by catalytically active and inactive CRISPR-Cas9 using asymmetric donor DNA.** *Nat Biotechnol.* 2016; **34**(3): 339–44.
PubMed Abstract | **Publisher Full Text**
14. Aksoy YA, Nguyen DT, Chow S, *et al.*: **Chemical reprogramming enhances homology-directed genome editing in zebrafish embryos.** *Commun Biol.* 2019; **2**: 198.
PubMed Abstract | **Publisher Full Text** | **Free Full Text**
15. Seol JH, Shim EY, Lee SE: **Microhomology-mediated end joining: good, bad and ugly.** *Mutat Res.* 2018; **809**: 81–87.
PubMed Abstract | **Publisher Full Text** | **Free Full Text**
16. Gabillard JC, Rallière C, Sabin N, *et al.*: **The production of fluorescent transgenic trout to study *in vitro* myogenic cell differentiation.** *BMC Biotechnol.* 2010; **10**: 39.
PubMed Abstract | **Publisher Full Text** | **Free Full Text**
17. Lebret V, Duret C, Herpin A, *et al.*: **Microhomology-mediated end-joining Knock-In approaches to delete the allergenic domain of trout parvalbumin beta-1. Preliminary results in F0 animals and feedback.** Underlying data [Data set]. *Zenodo.* 2024.
http://www.doi.org/10.5281/zenodo.13804556
18. Lebret V, Duret C, Herpin A, *et al.*: **Microhomology-mediated end-joining Knock-In approaches to delete the allergenic domain of trout parvalbumin beta-1. Preliminary results in F0 animals and feedback.** Reporting guidelines. *Zenodo.* 2024.
http://www.doi.org/10.5281/zenodo.13803707

Open Peer Review

Current Peer Review Status: ? ✓ ✓

Version 2

Reviewer Report 18 March 2025

https://doi.org/10.21956/openreseurope.21305.r51571

© **2025 Costa J.** This is an open access peer review report distributed under the terms of the Creative Commons Attribution License, which permits unrestricted use, distribution, and reproduction in any medium, provided the original work is properly cited.

✓ **Joana Costa**
[1] Faculty of Pharmacy, University of Porto, Porto, Porto District, Portugal
[2] REQUIMTE LAQV Porto, Porto, Portugal

The authors have addressed my concerns in this revision. I have no more comments

Competing Interests: No competing interests were disclosed.

Reviewer Expertise: Food allergy and immunology, Food allergen characterization, food allergen detection (DNA-and protein-based methods), GMO detection.

I confirm that I have read this submission and believe that I have an appropriate level of expertise to confirm that it is of an acceptable scientific standard.

Reviewer Report 03 March 2025

https://doi.org/10.21956/openreseurope.21305.r51569

© **2025 Xiong Q.** This is an open access peer review report distributed under the terms of the Creative Commons Attribution License, which permits unrestricted use, distribution, and reproduction in any medium, provided the original work is properly cited.

✓ **Qing Xiong**
The Hong Kong Polytechnic University, Hong Kong, Hong Kong

The authors have addressed my concerns in this revision. I have no more comments.

Competing Interests: No competing interests were disclosed.

Reviewer Expertise: Allergy and infectious diseases, Genomics and bioinformatics

I confirm that I have read this submission and believe that I have an appropriate level of expertise to confirm that it is of an acceptable scientific standard.

Version 1

Reviewer Report 09 January 2025

https://doi.org/10.21956/openreseurope.19693.r47220

© **2025 Costa J.** This is an open access peer review report distributed under the terms of the Creative Commons Attribution License, which permits unrestricted use, distribution, and reproduction in any medium, provided the original work is properly cited.

?

Joana Costa
[1] Faculty of Pharmacy, University of Porto, Porto, Porto District, Portugal
[2] REQUIMTE LAQV Porto, Porto, Portugal

The manuscript describes the application of gene editing techniques to decrease the allergenicity of trout by deleting the exon that codes for the allergenic peptide of parvb1 and substitute it by another from parvb2 encoding a non-allergenic peptide. The idea is well presented, and the experiments seem well designed. Additionally, the manuscript details the main constraints encountered in this study, such as the size of the sequence to be inserted. Another drawback regards the generation time of farmed fishes (>2 years for the trout). Still, some concerns may be raised based on some missing gaps, which could be addressed.

Comments:

Materials and Methods – this section would benefit from more information, namely regarding PCR performance, such as mix conditions and equipment. Scientific name of the trout should also be presented.

Results – It would be important to conduct an allergenicity/IgE-binding assessment, in order to prove that the genetic modification was efficient in decreasing the expression of allergenic parvalbumin, which could be done by extracting parvalbumin from F0 and wild type trout and test them against sera of fish allergic patients. This would allow to better conclude if the main objective of this manuscript would have been accomplished or not. If not performed, this aspect should be at least discussed as a fundamental step (proof of concept) for attaining a fish with potentially reduced allergenicity.

Is the work clearly and accurately presented and does it cite the current literature?
Yes

Is the study design appropriate and does the work have academic merit?
Partly

Are sufficient details of methods and analysis provided to allow replication by others?
Partly

If applicable, is the statistical analysis and its interpretation appropriate?
Not applicable

Are all the source data underlying the results available to ensure full reproducibility?
Partly

Are the conclusions drawn adequately supported by the results?
Yes

Competing Interests: No competing interests were disclosed.

Reviewer Expertise: Food allergy and immunology, Food allergen characterization, food allergen detection (DNA-and protein-based methods), GMO detection.

I confirm that I have read this submission and believe that I have an appropriate level of expertise to confirm that it is of an acceptable scientific standard, however I have significant reservations, as outlined above.

Author Response 13 Feb 2025

Pierre-yves Rescan

Dear Dr Joana Costa
Thank you for your support in reviewing our manuscript. Here, we present our responses to your valuable comments.
The manuscript describes the application of gene editing techniques to decrease the allergenicity of trout by deleting the exon that codes for the allergenic peptide of parvb1 and substitute it by another from parvb2 encoding a non-allergenic peptide. The idea is well presented, and the experiments seem well designed. Additionally, the manuscript details the main constraints encountered in this study, such as the size of the sequence to be inserted. Another drawback regards the generation time of farmed fishes (>2 years for the trout). Still, some concerns may be raised based on some missing gaps, which could be addressed.

Comments:

Materials and Methods – this section would benefit from more information, namely regarding PCR performance, such as mix conditions and equipment. Scientific name of the trout should also be presented.
Answer: Further details regarding PCR conditions and equipment are provided in the revised version. Also was specified the scientific name of the trout : *Oncorhynchus mykiss* (Walbaum, 1792)

Results – It would be important to conduct an allergenicity/IgE-binding assessment, in

order to prove that the genetic modification was efficient in decreasing the expression of allergenic parvalbumin, which could be done by extracting parvalbumin from F0 and wild type trout and test them against sera of fish allergic patients. This would allow to better conclude if the main objective of this manuscript would have been accomplished or not. If not performed, this aspect should be at least discussed as a fundamental step (proof of concept) for attaining a fish with potentially reduced allergenicity.
Answer. We agree that our manuscript deserves further explanations. Of course, our ultimate goal is to assess allergenicity of trout carrying null or modified parvb1 alleles testing sera from allergic patients. Towards this aim a collaboration was planned with Anette Kuehn (laboratory of immunogenetics and allergology, Luxembourg). Given that allergenicity is triggered by traces of allergens we believe that it is preferable to carrying out allergenicity tests on F2 (parvb1-/-) trout completely depleted of parvb1 and not in F0 trout that are likely to produce significant amount of parvb1. Unfortunately, as indicated in our manuscript, we were unable to generate homozygous null mutant after crossing two distinct F1 lines carrying one null allele. Therefore, the only way to continue our project was to specifically delete the allergenic domain of parvb1 gene using Knock-in. Unexpectedly, the MMEJ KI success rate was at the end found to be very low. As such, the only (and deliberately limited) aim the of the present manuscript is to point out the potential difficulties we encountered with MMEJ Knock In and to discuss new genomic techniques in aquaculture in the context of the lively debates, notably in the European parliament, regarding the feasibility and limitations of CRISPR-mediated Knock-Ins in farmed fish. In keeping with your comment, we have added, in the discussion section, a paragraph presenting future research axis in relation with possible evolutions of our research .

Competing Interests: No competing interests were disclosed.

Reviewer Report 04 December 2024

https://doi.org/10.21956/openreseurope.19693.r47708

© 2024 Xiong Q. This is an open access peer review report distributed under the terms of the Creative Commons Attribution License, which permits unrestricted use, distribution, and reproduction in any medium, provided the original work is properly cited.

?

Qing Xiong
The Hong Kong Polytechnic University, Hong Kong, Hong Kong

As preliminary results, this manuscript is promising but could be improved in several aspects:

1. The use of the common name "trout" is not sufficiently precise. The authors should clearly define the specific species used in this study, as there are many species referred to as trout.
2. Building on the previous point, it would be advantageous to conduct whole genome and transcriptome sequencing for the model organism used in this study. This is important because fish species often have multiple parvalbumin paralogs (refer 1). Whole genome sequencing is also powerful to detect the possible off-target effects after the knock-in

experiment.
3. Additionally, given the numerous parvalbumin paralogs in trout, it would be beneficial to compare transcriptome changes among these paralogs before and after the knock-in experiment.

Lastly, while I believe that the authors will assess changes in allergenicity, I strongly recommend that they consider all parvalbumin paralogs. This is directly related to allergenic potential and where off-target effects may occur.

References

1. Ng JKW, Xiong Q, Shi L, Wai CYY, et al.: Comparative analysis of asian carps parvalbumin reveals the divergence pattern of major fish allergen.*Asian Pac J Allergy Immunol*. 2024. PubMed Abstract | Publisher Full Text

Is the work clearly and accurately presented and does it cite the current literature?
Yes

Is the study design appropriate and does the work have academic merit?
Partly

Are sufficient details of methods and analysis provided to allow replication by others?
Partly

If applicable, is the statistical analysis and its interpretation appropriate?
I cannot comment. A qualified statistician is required.

Are all the source data underlying the results available to ensure full reproducibility?
Partly

Are the conclusions drawn adequately supported by the results?
Yes

Competing Interests: No competing interests were disclosed.

Reviewer Expertise: Allergy and infectious diseases, Genomics and bioinformatics

I confirm that I have read this submission and believe that I have an appropriate level of expertise to confirm that it is of an acceptable scientific standard, however I have significant reservations, as outlined above.

Author Response 13 Feb 2025

Pierre-yves Rescan

Dear Dr Qing Xiong,

Thank you for your effort in handling our manuscript. The manuscript was revised with attention to your recommendations. Please find below our response to the comments.

Reviewer Comments:
As preliminary results, this manuscript is promising but could be improved in several aspects:

1. The use of the common name "trout" is not sufficiently precise. The authors should clearly define the specific species used in this study, as there are many species referred to as trout.

Answer. We fully agree. The trout species we used for this study was *Oncorhynchus mykiss* (Walbaum, 1792*)*. This information is now provided in the “Methods” section.

Reviewer Comments:
2. Building on the previous point, it would be advantageous to conduct whole genome and transcriptome sequencing for the model organism used in this study. This is important because fish species often have multiple parvalbumin paralogs (refer 1). Whole genome sequencing is also powerful to detect the possible off-target effects after the knock-in experiment.

Answer. Oncorhynchus mykiss genome has been sequenced, assembled and annotated (Berthelot et al., 2014). As such, we were able to identify gRNAs specifically targeting Parvb1, evaluate potential off-target and predicts on-target activity. This information about Oncorhynchus mykiss genome knowledge has been added to the “methods” section.

Reviewer Comments:

3. Additionally, given the numerous parvalbumin paralogs in trout, it would be beneficial to compare transcriptome changes among these paralogs before and after the knock-in experiment.

Answer. We agree that it would be of interest to compare transcriptome changes before and after the knock-in experiment. But, for this purpose, it is necessary to produce homozygous F2 mutants. Unfortunately, although KI procedure could be considered as technically trivial, the success rate using MMEJ KI experiments was found to be very low. Therefore, the ambition of our manuscript was only to indicate that complex gene editing strategies, at least in farmed fish, definitely need further improvements before being routinely employed as popular procedure for engineering desirable phenotypic traits.

Reviewer Comments:

4. Lastly, while I believe that the authors will assess changes in allergenicity, I strongly recommend that they consider all parvalbumin paralogs. This is directly related to allergenic potential and where off-target effects may occur.

Answer. Indeed, different parvalbumin isoforms and isoallergens may be present in the same fish. Nevertheless, only a single trout parvb1 isoform was identified as allergen in specific patients (Kuehn et al., 2014). Therefore, invalidating or modifying this isoform could

prevent allergy in these specific patients.

Nevertheless, we agree that if changes in allergenicity are evidenced after parvb1 gene editing (coll. A. Kuehn), then it will be important to check that they are not related to undesirable off-targets affecting other parvalbumin paralogs.

Competing Interests: No competing interests were disclosed.

Reviewer Report 11 November 2024

https://doi.org/10.21956/openreseurope.19693.r45526

© 2024 Sundaray J. This is an open access peer review report distributed under the terms of the Creative Commons Attribution License, which permits unrestricted use, distribution, and reproduction in any medium, provided the original work is properly cited.

?

Jitendra Kumar Sundaray
ICAR-Central Institute of Freshwater Aquaculture, Bhubaneswar-751002, Odisha,, India

- The MS does not provide adequate information on Microhomology-Mediated End Joining (MMEJ).
- In the exon skipping experiment, it was noted that only 10 indels were detected out of 191 samples. , This is a low efficiency, and the paper could have added an explanation about the same.(such as..gRNA efficiency)
- In the exon swapping experiment, exon 2 of parvb 2 have been inserted- It would be useful to clarify whether Exon 2 encodes any critical functional domains -Could have provided more insights.
- The same set of gRNAs is used in both the exon skipping and exon swapping experiments, yet there were no observed indels in the exon swapping experiment.What could be the possible reasons?
- In Figure 2 (Genotyping image), it would be helpful to include wild-type trout DNA samples as a baseline for comparison.

Is the work clearly and accurately presented and does it cite the current literature?
Yes

Is the study design appropriate and does the work have academic merit?
Yes

Are sufficient details of methods and analysis provided to allow replication by others?
Partly

If applicable, is the statistical analysis and its interpretation appropriate?
Not applicable

Are all the source data underlying the results available to ensure full reproducibility?
Yes

Are the conclusions drawn adequately supported by the results?
Partly

Competing Interests: No competing interests were disclosed.

Reviewer Expertise: Fish Genetics, Microbiome and Genome editing

I confirm that I have read this submission and believe that I have an appropriate level of expertise to confirm that it is of an acceptable scientific standard, however I have significant reservations, as outlined above.

Author Response 13 Feb 2025

Pierre-yves Rescan

11 Nov 2024 Version 1
Jitendra Kumar Sundaray , ICAR-Central Institute of Freshwater Aquaculture, Bhubaneswar-751002, Odisha,, India

Dear Dr Jitendra Kumar Sundaray Thank you for your valuable comments on our manuscript. Here, we present our answers to your comments.

- The MS does not provide adequate information on Microhomology-Mediated End Joining (MMEJ).
- In the exon skipping experiment, it was noted that only 10 indels were detected out of 191 samples. , This is a low efficiency, and the paper could have added an explanation about the same.(such as..gRNA efficiency)

Answer. This point is important and, indeed, deserves further clarifications. The efficiency of gRNA1 and gRNA2 has been evidenced during preliminary experiments aiming to select among several gRNAs (12 in all...) those which displayed activity as shown by sequencing of PCR products. So, both RNAg1 and RNAg2 recurrently elicit indels when injected individually in zygote. Our genotyping based on gel electrophoresis of PCR products was appropriate to uncover alleles resulting from Parvb1 exon2 skipping or swapping but not alleles with small (<10 nucleotides) indels. So, it is clear that the use of gel electrophoresis alone underestimated efficiency of RNAg1 and RNAg2 after Exon skipping and swapping experiment. A sequencing of all PCR products would have clarified this point, but we did not systematically perform PCR products sequencing. In the revised version we added these essential considerations to the “Method” section.

- In the exon swapping experiment, exon 2 of parvb 2 have been inserted- It would be useful to clarify whether Exon 2 encodes any critical functional domains -Could have provided more insights.

Answer. Indeed, we should have developed this point. Parvalbumins contain specific EF-hands motifs which are involved in the binding of calcium. Exon2 partly encodes one of the two EF-hands motifs present in parvb1 and parvb2 proteins. Replacing parvb1 exon2 with parvb2 exon2 that does not encode the allergenic peptide opened the interesting possibility of producing a modified parvb1 protein possessing the two EF-hand motifs but lacking the

allergenic peptide. These information have been added at the beginning of the 'Results" section (paragraph "Exon2 skipping").

- The same set of gRNAs is used in both the exon skipping and exon swapping experiments, yet there were no observed indels in the exon swapping experiment. What could be the possible reasons?

Answer: Again, alleles with small indels were likely to be produced in the exon swapping experiment as for exon skipping experiment using RNAg1 and RNAg2, but these indels are not detected using gel electrophoresis of PCR products (see above). Regarding the complete absence of proper insertion of the donor DNA used for exon swapping we can hypothesize that it relates to the greater length of the donor DNA used for exon swapping compared to that used for exon skipping.

- In Figure 2 (Genotyping image), it would be helpful to include wild-type trout DNA samples as a baseline for comparison.

Answer: Figure 2 was modified to include wild type DNA samples as requested.

Is the work clearly and accurately presented and does it cite the current literature?
Yes

Is the study design appropriate and does the work have academic merit?
Yes

Are sufficient details of methods and analysis provided to allow replication by others?
Partly

If applicable, is the statistical analysis and its interpretation appropriate?
Not applicable

Are all the source data underlying the results available to ensure full reproducibility?
Yes

Are the conclusions drawn adequately supported by the results?
Partly

Competing Interests No competing interests were disclosed.

Reviewer Expertise Fish Genetics, Microbiome and Genome editing

I confirm that I have read this submission and believe that I have an appropriate level of expertise to confirm that it is of an acceptable scientific standard, however I have significant reservations, as outlined above.

Competing Interests: No competing interests were disclosed.