Check for updates

RESEARCH ARTICLE

Development and testing of compact electronic modules for detectors based on SiPM array

[version 1; peer review: 2 approved]

Ramil Akbarov[1-4], Sabuhi Nuruyev[2,3], Sergei Tyutyunnikov[3], Patrik Kucera[5], Michael Holik[5]

[1]Innovation and Digital Development Agency, Nuclear Research Department, IDDA, Gobu str. 20th km of Baku-Shamakhi Highway, Baku, AZ01021, Azerbaijan
[2]Institute of Radiation Problems under Ministry of Science and Education, B.Vahabzade str. 9, Baku, AZ1143, Azerbaijan
[3]Joint Institute for Nuclear Researches, Joliot-Curie 6, Dubna, 141980, Russian Federation
[4]Khazar University, 41 Mahsati Str., Baku, AZ1096, Azerbaijan
[5]Faculty of Electrical Engineering, UWB in Pilsen, Univerzitni, 2795/26, Pilsen, 306 14, Czech Republic

v1 **First published:** 31 Jan 2025, **5**:33
https://doi.org/10.12688/openreseurope.19256.1
Latest published: 31 Jan 2025, **5**:33
https://doi.org/10.12688/openreseurope.19256.1

Abstract

Background

Compact electronic modules are essential for modern detector systems utilizing Silicon Photomultiplier (SiPM) arrays due to their small size, low power consumption, and high precision. To address the growing demand for portable and efficient detection systems, the development of modules tailored for such applications has become a critical focus. This study introduces compact electronic modules designed for detectors based on MAPD (Microcell Avalanche Photodiode) arrays, aiming to improve reliability and versatility for industrial, medical, and scientific applications.

Methods

The developed modules include two primary components:

DC-DC Voltage Converter: Based on the MAX1932ETC chip.

Converts a 5 V input to a stable output voltage adjustable between 30 and 90 V.

Supports a maximum current of 2.5 mA, ensuring reliable operation for SiPM arrays.

Signal Amplification Unit: Utilizes the LTC6268 chip.

Open Peer Review

Approval Status ✓ ✓

	1	2
version 1 31 Jan 2025	✓ view	✓ view

1. **Sonali Bhatnagar**, Dayalbagh Educational Institute, Agra, India

2. **Azer Sadigov**, Department of Nuclear Research of IDDA, Baku, Azerbaijan

Any reports and responses or comments on the article can be found at the end of the article.

Processes input signals ranging from 10 to 75 mV.

Offers a gain factor of 45, characterized by low noise and high precision.

The modules were integrated with a scintillation detector comprising a MAPD-3NM-II photodiode array and an LFs scintillator. Performance testing was conducted using a Cs-137 gamma source.

Results

The energy resolution of the detector system was evaluated using the 662 keV gamma line from the Cs-137 source. The modules achieved an energy resolution of 10 ± 0.5%, demonstrating high reliability and efficiency. This performance confirms the modules' capability to maintain stable operation and precise signal processing under real-world conditions.

Conclusions

The developed compact electronic modules provide a cost-effective and efficient solution for detectors utilizing SiPM arrays. Their stable voltage conversion, low-noise signal amplification, and high energy resolution make them suitable for a wide range of applications in industrial, medical, and scientific fields. Future work may focus on optimizing the modules for broader voltage ranges and compatibility with different scintillator materials to expand their applicability.

Plain Language Summary

This study describes the development of small, efficient electronic modules designed for detectors using advanced light sensors called Silicon Photomultipliers (SiPMs). These modules include two key parts:

A voltage converter that turns a 5V input into a stable, adjustable output between 30 and 90 volts, allowing the detector to operate reliably.

A signal amplifier that boosts weak signals from the detector, making them clearer and easier to measure.

The modules were tested with a special detector that uses an MAPD-3NM-II light sensor and a material called LFs, which glows when it detects radiation. Using a radioactive source (Cs-137), the detector measured the energy of gamma rays with high accuracy, achieving an energy resolution of 10%.

These results show that the modules are reliable and effective. They are compact, affordable, and suitable for use in fields like medical imaging, industrial safety, and scientific research.

Keywords
SiPM, MAPD-3NM, electronic modules, scintillation detector

This article is included in the Horizon Europe gateway.

This article is included in the Marie-Sklodowska-Curie Actions (MSCA) gateway.

Corresponding author: Ramil Akbarov (ramilakbarow@gmail.com)

Author roles: Akbarov R: Conceptualization, Investigation, Validation, Writing – Original Draft Preparation, Writing – Review & Editing; **Nuruyev S**: Investigation, Validation; **Tyutyunnikov S**: Supervision; **Kucera P**: Conceptualization, Methodology; **Holik M**: Conceptualization, Methodology, Software

Competing interests: No competing interests were disclosed.

Grant information: 1 - This work has partly received funding from the European Union's Horizon 2022 Research and Innovation Programme under the Marie Sklodowska-Curie's DETMED project (grant agreement ID 101129879). 2 - This project has received funding from the Azerbaijan Science Foundation AEF-MGC-2024-2(50)-16/04/1-M-04

Copyright: © 2025 Akbarov R *et al*. This is an open access article distributed under the terms of the Creative Commons Attribution License, which permits unrestricted use, distribution, and reproduction in any medium, provided the original work is properly cited.

How to cite this article: Akbarov R, Nuruyev S, Tyutyunnikov S *et al.* **Development and testing of compact electronic modules for detectors based on SiPM array [version 1; peer review: 2 approved]** Open Research Europe 2025, **5**:33 https://doi.org/10.12688/openreseurope.19256.1

First published: 31 Jan 2025, **5**:33 https://doi.org/10.12688/openreseurope.19256.1

Introduction

Silicon photomultipliers (SiPMs)[1-3] have emerged as a transformative technology in the field of photodetection, offering significant advantages over traditional vacuum photomultiplier tubes (PMTs). Their compact design, low operating voltage, fast response, and high sensitivity have made SiPMs an essential component in diverse applications, including particle physics, astrophysics, nuclear physics, medical imaging, and security systems[4–10]. SiPM-based detectors, particularly in scintillation applications, are gaining prominence in high-energy physics due to their ability to register particles across a broad intensity spectrum[11]. Furthermore, their integration into positron emission tomography (PET) scanners as matrix assemblies has demonstrated the potential to enhance photon detection efficiency in medical diagnostics[12].

Matrix assemblies of avalanche photodiodes, such as the MAPD (Micro-pixel Avalanche Photodiode), are especially advantageous in experiments requiring large active areas for effective photon registration. However, the implementation of SiPM matrices necessitates the development of specialized electronic modules to ensure optimal performance[13–15]. These modules typically include power supply systems capable of providing stable, adjustable high voltages and signal amplification units designed for low-noise operation with high gain factors. Despite the growing interest in SiPM-based systems, the availability of compact, cost-effective, and high-performance electronic modules for such applications remains limited.

This study addresses this gap by presenting the development and testing of compact electronic modules specifically designed for detectors utilizing MAPD arrays. The developed modules include a DC-DC voltage converter capable of delivering a stable output voltage within the range of 30–90 V and a signal amplification unit that amplifies input signals with a gain factor of 45. To evaluate their performance, the modules were integrated into a scintillation detector comprising a MAPD-3NM-II photodiode matrix[16] and a LSO scintillator. Testing with a Cs-137 gamma source demonstrated the modules' effectiveness and reliability, showcasing their potential for use in industrial, medical, and scientific applications.

Methods

DC-DC converter

The matrix utilized in this study consisted of 16 individual MAPD elements arranged in a 4×4 configuration, resulting in a total matrix size of 14.8×14.8 mm^2. Each MAPD element operates at a nominal voltage of 54 V, necessitating a power supply capable of providing stable and adjustable high-voltage output. To meet these requirements, a DC-DC converter circuit was designed and assembled using the MAX1932ETC chip, known for its high efficiency and reliability in voltage conversion applications (Figure 1a). The converter was configured to accept a standard 5 V input, a convenient and widely available supply voltage, and to produce a regulated output voltage within the range of 30 to 90 V. The circuit is characterized by its simplicity and exceptional stability, offering reliable operation under varying conditions.

One of the key features of this circuit is its capability for precise voltage adjustment using a potentiometer, allowing for fine-tuning to match specific operational requirements. Additionally, the design includes the option to connect a thermistor to modify the output voltage dynamically, an important advantage given the sensitivity of SiPMs to temperature variations. To evaluate the performance of the converter, test measurements of the output voltage as a function of the regulator resistance were conducted, and the results are presented in Figure 1b. The circuit demonstrated power consumption of less than 2 mA, indicating its efficiency. Furthermore, a linear relationship between the output voltage and the normalized resistance was observed across the adjustable range of 30 to 90 V, with a maximum current limit of 2.5 mA. These characteristics highlight the

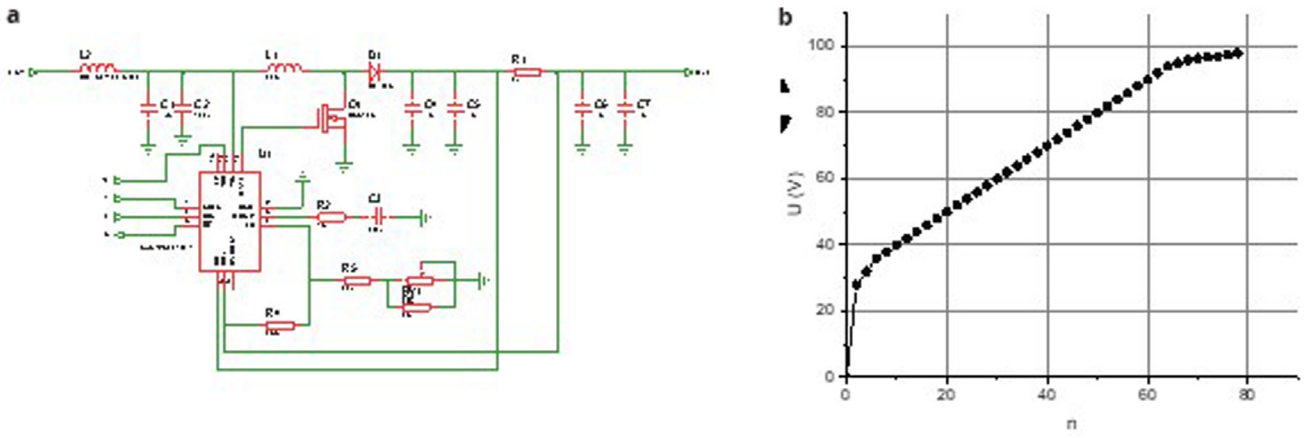

Figure 1. Circuit diagram of the DC-DC converter (**a**) and the dependence of the output voltage on the resistance of the regulator (**b**).

converter's excellent performance, making it well-suited for powering SiPM arrays in high-precision applications.

Signal amplifier

To enhance the output signal of the MAPD matrix, a signal amplification circuit was designed and assembled using the LTC6268 chip. This amplifier is specifically chosen for its combination of low power consumption and minimal noise generation, making it highly suitable for applications demanding precision and sensitivity. These include photodiode signal processing, measurement systems, and detailed signal analysis. Additionally, its compact design ensures its seamless integration into systems requiring single-channel configurations, further enhancing its versatility for various high-performance applications.

The circuit operates by connecting the photodiode to the inverting input of the operational amplifier through a low-resistance resistor, designated as R9 (Figure 2a). The photodiode's output current is converted into a corresponding voltage signal by the feedback resistor R8, which plays a pivotal role in defining the circuit's gain. The gain of the amplifier is governed by the ratio of the resistances R8 and R9, with these values carefully selected based on the anticipated signal levels from the photodiode. To further optimize performance, a feedback capacitor, labeled C5, is integrated into the circuit to suppress unwanted noise and mitigate high-frequency oscillations that could compromise signal integrity.

The circuit is powered by a voltage supply ranging from 2.7 V to 5 V, making it compatible with both battery-based systems and constant voltage sources. This flexibility allows it to be deployed in a variety of operational scenarios. The output voltage V_{out} and the amplifier gain K are determined by well-established mathematical expressions below, linking these parameters to the current generated by the photodiode and the resistor values. Overall, this amplifier circuit provides a robust, efficient, and precise solution for enhancing the signals generated by MAPD matrices in demanding detection and measurement environments.

$$V_{out} = I_{ph} \times R8,\ K = \frac{R8}{R9},$$

where I_{ph} is the current generated by the photodiode.

The gain can be determined from the dependence of the output amplitude on the input signal amplitude (Figure 2b). In this case, the gain K is 45, with a bandwidth of approximately 100 MHz. The linear range of input amplitudes for amplification was from 10 mV to 75 mV. This range allows the use of photodiode matrices with output amplitudes in the tens of millivolts.

Testing of electronic modules

The electronic modules were tested using a scintillation detector based on a MAPD-3NM-II avalanche photodiode array and a LSO scintillator[17]. The crystal dimensions were 15×15×15 mm^3. To minimize light losses, the scintillator was covered with Teflon tape. One side of the scintillator was left open for connection with the SiPM matrix (Figure 3a). To ensure better optical contact between the MAPD matrix and the scintillator, a special optical gel with a high transparency coefficient was used.

To test the capability of registering ionizing radiation, a calibration point source of cesium Cs-137 was used, positioned above the scintillator. The DC-DC converter converted 5V into a stable 54V, which powered the matrix. The signal from the matrix was amplified by the assembled amplifier with a gain of 45. The data were recorded and analyzed

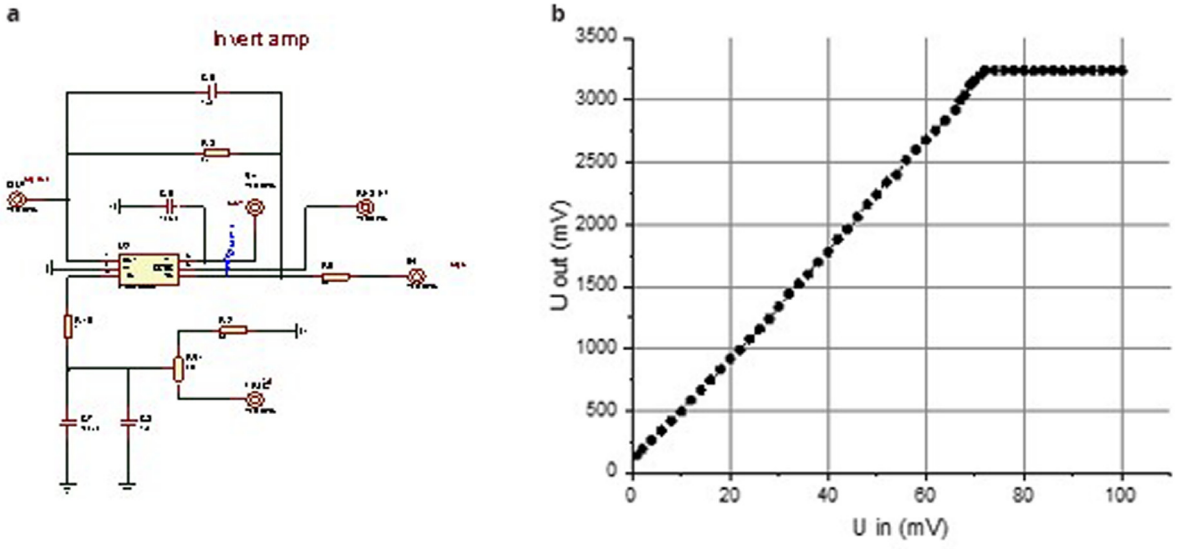

Figure 2. Circuit diagram of the inverting preamplifier (**a**) and the dependence of the output amplitude on the input signal amplitude (**b**).

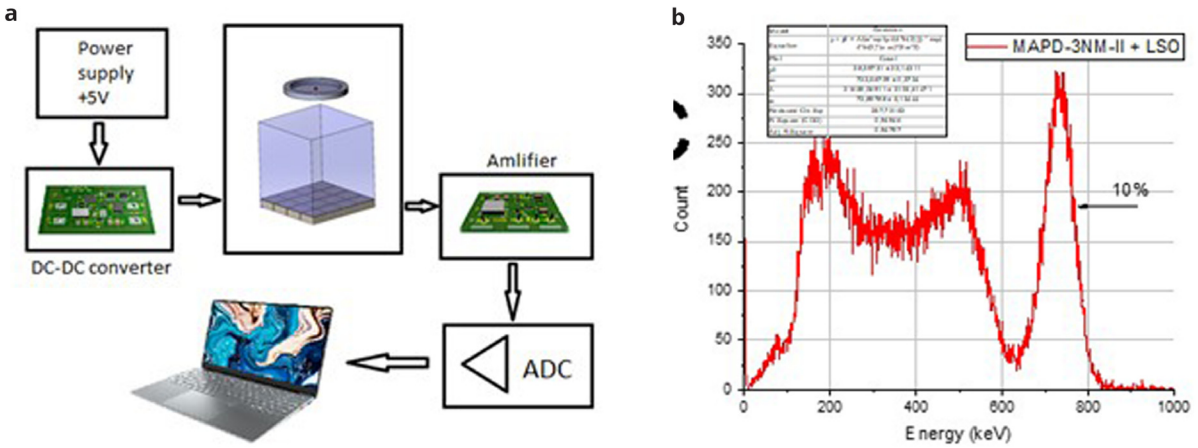

Figure 3. Test experimental setup (**a**); Cs-137 spectrum obtained by the test detector based on the MAPD array+LSO (**b**).

using the CAEN DT5720 analog-to-digital converter (ADC) with a sampling rate of 250 MHz. Measurements were conducted at room temperature in a light-isolated chamber.

The acquired data are presented in the spectrum shown in Figure 3b. Data analysis revealed an energy resolution of 10 ± 0.5% for the 662 keV gamma emission of Cs-137. This level of precision indicates a low noise level in the developed electronic modules. Despite their simplicity, the electronic modules demonstrate high performance.

Conclusion

Highly efficient electronic modules were designed and developed to support the operation of avalanche photodiode (MAPD) matrices, ensuring reliable performance in detection systems. The DC-DC converter module is capable of delivering a stable and adjustable output voltage within the linear range of 30 to 90 V, with a high precision of up to 10 mV and a current capacity of up to 2.5 mA. This capability provides the necessary flexibility to meet the voltage requirements of various MAPD configurations. Additionally, the amplification module is designed to enhance input signals ranging from 10 to 75 mV, achieving a fixed gain of 45. These characteristics make the modules particularly well-suited for detectors utilizing MAPD arrays, enabling accurate and sensitive signal processing.

The modules were rigorously tested within a scintillation detection system, which comprised a MAPD matrix and a LSO scintillator. A calibration experiment was conducted using Cs-137 as the gamma source, emitting gamma quanta with an energy of 662 keV. The testing demonstrated an impressive energy resolution of 10 ± 0.5%, underscoring the low-noise performance and precision of the developed modules. These results validate the modules' effectiveness in amplifying and stabilizing signals in complex detection scenarios.

In conclusion, the developed electronic modules represent a compact, efficient, and cost-effective solution for powering and processing signals from silicon avalanche photodiode matrices. Their demonstrated performance makes them highly suitable for a wide range of applications in industrial, medical, and scientific fields, including radiation detection, medical imaging, and particle physics experiments. The modules' compact design and robust functionality further enhance their potential for integration into advanced detection systems, meeting the demands of high-precision and high-sensitivity applications.

Data availability

Underlying data

Open Science Framework: Development and Testing of Compact Electronic Modules for Detectors Based on SiPM array.

https://doi.org/10.17605/OSF.IO/FZ6J9[18]

This project contains the following data:

- Amplifier data.xlsx (the dependence of the output amplitude on the input signal amplitude)
- Power supply data.xlsx (the dependence of the output voltage on the resistance of the regulator)
- Spectr Cs-137 -MAPD-3NM2-LSO.xlsx (Cs-137 spectrum obtained by the test detector based on the MAPD array+LSO)

Extended data

Open Science Framework: Development and Testing of Compact Electronic Modules for Detectors Based on SiPM array.

https://doi.org/10.17605/OSF.IO/FZ6J9[18]

This project contains the following data:

- Amplifier circuit.eps (circuit diagram of the inverting preamplifier)
- Amplifier data.eps (the dependence of the output amplitude on the input signal amplitude)
- Experiment scheme.tif (test experimental setup)
- Power supply circuit.eps (circuit diagram of the DC-DC converter)
- Power supply data.eps (the dependence of the output voltage on the resistance of the regulator)
- Spectr img.eps (Cs-137 spectrum obtained by the test detector based on the MAPD array+LSO)

Data are available under the terms of the Creative Commons Zero "No rights reserved" data waiver (CC0 1.0 Public domain dedication)

(http://creativecommons.org/publicdomain/zero/1.0/)

Acknowledgements

I would like to express my personal gratitude to the Deputy Head of the Division for Research Oleg Belov (LHEP, JINR) for the administrative and financial support provided during the implementation of this research work.

References

1. Sadygov Z, Sadigov A, Khorev S, *et al.*: **Silicon photomultipliers: status and prospects.** *Phys Part Nucl Lett.* 2020; **17**: 160–176.
Publisher Full Text
2. Ahmadov F, Ahmadov G, Akbarov R, *et al.*: **Investigation of parameters of new MAPD-3NM silicon photomultipliers.** *J Instrum.* 2022; **17**: C01001.
Publisher Full Text
3. Nuruyev S, Ahmadov F, Sadygov Z, *et al.*: **Performance of a new generation of micropixel avalanche photodiodes with high pixel density and high photon detection efficiency.** *Nucl Instrum Methods Phys Res A: Accel Spectrom Detect Assoc Equip.* 2018; **912**: 320–322.
Publisher Full Text
4. Ahmadov F, Abdullayev F, Ahmadov G, *et al.*: **New phoswich detector based on LFS and *p*-terphenyl scintillators coupled to micro pixel avalanche photodiode.** *Funct Mater.* 2017; **24**(2): 341–344.
Publisher Full Text
5. Ahmadov F, Abdinov O, Ahmadov G, *et al.*: **Alpha particle detector based on micropixel avalanche photodiodes.** *Phys Part Nucl Lett.* 2013; **10**: 778–779.
Publisher Full Text
6. Ahmadov G, Ahmadov F, Holik M, *et al.*: **Gamma-ray spectroscopy with MAPD array in the readout of $LaBr_3$:Ce scintillator.** *J Instrum.* 2021; **16**: P07020.
Publisher Full Text
7. Akbarov RA, Nuruyev SM, Ahmadov GS, *et al.*: **Scintillation readout with MAPD array for gamma spectrometer.** *J Instrum.* 2020; **15**: C01001.
Publisher Full Text
8. Ablikim M, Achasov MN, Adlarson P, *et al.*: **Search for the charged lepton flavor violating decay.** *Phys Rev D.* 2021; **103**: 112007.
Publisher Full Text
9. Schaart DR: **Physics and technology of time-of-flight PET detectors.** *Phys Med Biol.* 2021; **66**(9): 09TR01.
PubMed Abstract | Publisher Full Text
10. Akbarov R, Ahmadov GS, Ahmadov FI, *et al.*: **Fast neutron detectors with silicon photomultiplier readouts.** *Nucl Instrum Methods Phys Res A: Accel Spectrom Detect Assoc Equip.* 2019; **936**: 549–551.
Publisher Full Text
11. Simon F: **Silicon photomultipliers in particle and nuclear physics.** *Nucl Instrum Methods Phys Res A: Accel Spectrom Detect Assoc Equip.* 2019; **926**: 85–100.
Publisher Full Text
12. Surti S, Karp JS: **Advances in time-of-flight PET.** *Phys Med.* 2016; **32**(1): 12–22.
PubMed Abstract | Publisher Full Text | Free Full Text
13. Sadigov A, Nuruyev S, Akbarov R, *et al.*: **Compact and sustainable electronic module for silicon photodetectors.** *Eurasian Journal of Physics and Functional Materials.* 2023; **7**(3): 2.
Publisher Full Text
14. Nuruyev S, Berikov D, Akbarov R, *et al.*: **Neutron/gamma scintillation detector for status monitoring of accelerator-driven neutron source IREN.** *Nucl Eng Technol.* 2024; **56**(5): 1667–1671.
Publisher Full Text
15. Holik M, Ahmadov F, Sadigov A, *et al.*: **Study of Dynamic Time Over Threshold (DTOT) method for application in spectroscopy signal analysis toward a low complexity front-end electronics with high spectroscopy resolution and wide energy range.** *IEEE Trans Nucl Sci.* ISSN: 0018-9499, 2024; 1–1.
Publisher Full Text
16. Ahmadov F, Abdullayev F, Ahmadov G, *et al.*: **A new physical model of Geiger-mode avalanche photodiodes.** *J Instrum.* 2020; **15**: C01009.
Publisher Full Text
17. Sadigov AZ, Ahmadov FI, Sadygov ZY, *et al.*: **Improvement of parameters of micro-pixel avalanche photodiodes.** *J Instrum.* 2022; **17**: P07021.
Publisher Full Text
18. Akbarov R: **Development and testing of compact electronic modules for detectors based on SiPM array.** [Dataset], OSF. 2024.
http://www.doi.org/10.17605/OSF.IO/FZ6J9

Open Peer Review

Current Peer Review Status: ✔ ✔

Version 1

Reviewer Report 03 October 2025

https://doi.org/10.21956/openreseurope.20843.r61233

© **2025 Sadigov A.** This is an open access peer review report distributed under the terms of the Creative Commons Attribution License, which permits unrestricted use, distribution, and reproduction in any medium, provided the original work is properly cited.

✔ **Azer Sadigov**
Department of Nuclear Research of IDDA, Baku, Azerbaijan

The authors present a comprehensive study on the development and testing of compact electronic modules for SiPM array–based detectors.

The design concept is clearly described, with a strong focus on low-noise front-end electronics, optimized signal shaping, and fast readout integration.

These features are essential to fully exploit the intrinsic advantages of SiPM technology, such as high photon detection efficiency and fast timing response. The authors also address critical challenges associated with SiPM operation, including suppression of dark counts, ensuring linearity of response across a wide dynamic range, and minimizing inter-pixel cross-talk.

The testing methodology—based on calibration with standard radiation sources and detailed evaluation of gain stability and timing resolution—demonstrates both scientific rigor and practical orientation.

One of the major strengths of the work lies in the compactness of the developed modules. This design feature opens clear perspectives for their integration into portable and field-deployable detection systems, which is of great importance for medical imaging, homeland security, and environmental monitoring. The modular structure further enhances flexibility, allowing the system to be adapted to different array sizes and geometries. Such scalability ensures applicability in a wide variety of experimental and applied contexts. The demonstrated stable operation under different environmental conditions highlights the robustness of the proposed solution and strengthens its potential for real-world deployment.

At the same time, the review notes certain limitations. **The figures presented in the work are of relatively low resolution**, which reduces the clarity of the technical details and may hinder a full assessment of the results. Improving figure quality would significantly enhance the overall readability and impact of the study.

Is the work clearly and accurately presented and does it cite the current literature?
Yes

Is the study design appropriate and does the work have academic merit?
Yes

Are sufficient details of methods and analysis provided to allow replication by others?
Partly

If applicable, is the statistical analysis and its interpretation appropriate?
Partly

Are all the source data underlying the results available to ensure full reproducibility?
Yes

Are the conclusions drawn adequately supported by the results?
Partly

Competing Interests: No competing interests were disclosed.

Reviewer Expertise: Semiconductor physics, Radiation detectors, Nuclear research

I confirm that I have read this submission and believe that I have an appropriate level of expertise to confirm that it is of an acceptable scientific standard.

Author Response 03 Oct 2025

Ramil Akbarov

Thank you for your time and attention.
I will take your valid comments into account and make revisions to the final version of the article.

Competing Interests: No competing interests were disclosed.

Reviewer Report 18 July 2025

https://doi.org/10.21956/openreseurope.20843.r50651

© 2025 Bhatnagar S. This is an open access peer review report distributed under the terms of the Creative Commons Attribution License, which permits unrestricted use, distribution, and reproduction in any medium, provided the original work is properly cited.

Sonali Bhatnagar
Dayalbagh Educational Institute, Agra, India

The paper is based on the electronics experimental design of Silicon photo multiplier arrays for scintillation detectors. This is an important area of research that shall minimise the size and increase the efficiency of the arrays. This shall be a boost to multi-messenger astrophysics, which is the present-day science of the Universe. These new experimental studies shall support the astrophysics, medical science, and space physics research where the size of the instrument is an important parameter.

The work is clear and accurate for the SiPMTs data given. I have seen the data sheets of the amplifier, power supply, and spectrum of Cs-137.
The work has academic merit as required in astroparticle physics.
Few points need to be clarified:
1.In Fig. 1, the second graph depicts the output voltage vs resistance of the regulator. The resistance is not given with units as it is normalised, so mention this in caption.
2. The Fig.1 a can be shown with a large font size to make it clear.
3. The Figure 2 a and 2b need to be more clear with large font size in labels of the circuit and axes labels.
4. In line "The linear range of input amplitudes for amplification was from 10 mV to 75 mV. , the range looks to be 10 mV to 70 mV, not 75mV.
5. a special optical gel with a high transparency coefficient was used, mention this gel and value of coefficient.
6. Fig 3b inset details are not clear in the spectrum.

The energy spectrum is supported by data, and energy resolution has been clearly shown. The source data has been made available, and the conclusions are appropriate.

Is the work clearly and accurately presented and does it cite the current literature?
Yes

Is the study design appropriate and does the work have academic merit?
Yes

Are sufficient details of methods and analysis provided to allow replication by others?
Yes

If applicable, is the statistical analysis and its interpretation appropriate?
Yes

Are all the source data underlying the results available to ensure full reproducibility?
Yes

Are the conclusions drawn adequately supported by the results?
Yes

Competing Interests: No competing interests were disclosed.

Reviewer Expertise: Detector Physics, astroparticle physics

I confirm that I have read this submission and believe that I have an appropriate level of expertise to confirm that it is of an acceptable scientific standard.

Author Response 03 Oct 2025

Ramil Akbarov

Thank you for your time and attention.

4. Yes, you're right. The range is from 10 mV to 70 mV, not 75 mV.

The errors in the figures will be corrected.

I'll take your valid comments into account and make corrections to the final version of the article.

Competing Interests: No competing interests were disclosed.