Check for updates

RESEARCH ARTICLE

# Miniature vacuum chamber for electrical characterization of air-sensitive nanodevices

[version 1; peer review: 2 approved with reservations]

Juan José Riquelme, Rafael Luque Merino, Andrés Castellanos-Gómez

2D Foundry Research Group, Instituto de Ciencia de Materiales de Madrid Consejo Superior de Investigaciones Cientificas (ICMM-CSIC), Madrid, Community of Madrid, Spain

**v1** **First published:** 08 Jul 2025, **5**:182
https://doi.org/10.12688/openreseurope.20612.1
**Latest published:** 08 Jul 2025, **5**:182
https://doi.org/10.12688/openreseurope.20612.1

## Abstract

### Introduction

Nanomaterial devices are extremely sensitive to environmental factors, making controlled atmosphere measurements crucial. However, commercial vacuum probe stations are often too costly and bulky, limiting their use, especially in glovebox setups for air-sensitive materials.

### Methods

We designed a compact, low-cost vacuum chamber with electrical feedthroughs for characterizing air-sensitive nanodevices. Built from standard vacuum components and a custom test board, the system enables three-terminal transport measurements under illumination and fits inside a glovebox for safe sample handling.

### Results and Conclusions

We demonstrated the functionality of our low-cost vacuum chamber system by performing electrical transport measurements on a black phosphorus field-effect device prepared in an inert atmosphere. In the miniature vacuum chamber, the device performance was maintained over 15 days. The system enables reliable characterization of air-sensitive nanodevices under controlled conditions, providing an affordable and practical alternative to commercial setups.

## Keywords
Vacuum chamber system, Air-sensitive nanodevices, Electrical transport measurements, 2D materials

**Open Peer Review**

**Approval Status** ? ?

| | 1 | 2 |
|---|---|---|
| **version 1** 08 Jul 2025 | ? view | ? view |

1. **Edgar Mosquera-Vargas**, Universidad del Valle, Cali, Colombia

2. **Ehsan Elahi**, University of Chemistry and Technology, Prague, Czech Republic

Any reports and responses or comments on the article can be found at the end of the article.




This article is included in the Horizon 2020 gateway.




This article is included in the European Research Council (ERC) gateway.



This article is included in the Nanomaterials collection.

**Corresponding authors:** Juan José Riquelme (jj.riquelme@csic.es), Andrés Castellanos-Gómez (andres.castellanos@csic.es)

**Author roles: Riquelme JJ**: Conceptualization, Data Curation, Investigation, Methodology, Visualization, Writing – Original Draft Preparation, Writing – Review & Editing; **Luque Merino R**: Data Curation, Formal Analysis, Investigation, Methodology, Visualization, Writing – Original Draft Preparation, Writing – Review & Editing; **Castellanos-Gómez A**: Conceptualization, Data Curation, Funding Acquisition, Investigation, Methodology, Project Administration, Resources, Supervision, Validation, Writing – Original Draft Preparation, Writing – Review & Editing

**Competing interests:** No competing interests were disclosed.

**Grant information:** This project has received funding from the European Union's Horizon Europe research and innovation programme under grant agreement No. 755655 (2D-TOPSENSE). A.C-G. acknowledges funding from the Ministry of Science and Innovation (Spain) through projects TED2021-132267B-I00, PID2020-115566RB-I00, PDC2023-145920-I00, and PID2023-151946OB-I00 and the European Research Council through ERC-2024-PoC StEnSo (grant agreement 101185235) and ERC-2024-SyG SKIN2DTRONICS. J. J. Riquelme hired under the Generation D initiative, promoted by Red.es, an organization attached to the Ministry for Digital Transformation and the Civil Service, for the attraction and retention of talent through grants and training contracts, financed by the Recovery, Transformation, and Resilience Plan through the European Union's Next Generation funds.
*The funders had no role in study design, data collection and analysis, decision to publish, or preparation of the manuscript.*

**Copyright:** © 2025 Riquelme JJ *et al*. This is an open access article distributed under the terms of the Creative Commons Attribution License, which permits unrestricted use, distribution, and reproduction in any medium, provided the original work is properly cited.

**How to cite this article:** Riquelme JJ, Luque Merino R and Castellanos-Gómez A. **Miniature vacuum chamber for electrical characterization of air-sensitive nanodevices [version 1; peer review: 2 approved with reservations]** Open Research Europe 2025, **5**:182 https://doi.org/10.12688/openreseurope.20612.1

**First published:** 08 Jul 2025, **5**:182 https://doi.org/10.12688/openreseurope.20612.1

## Introduction

Nanomaterial-based devices, characterized by their high surface-to-volume ratio, are highly sensitive to external factors, such as moisture and atmospheric contaminants[1–4]. To accurately assess their intrinsic electrical and optoelectronic properties, it is essential to conduct measurements under controlled environmental conditions, which often require high-vacuum systems. Although commercially available vacuum probe stations provide robust solutions for these measurements, they are prohibitively expensive for many research groups. Furthermore, their size and complexity often render them incompatible with glovebox environments, which are essential for the study of air-sensitive materials.

Recent advances in nanotechnology have spurred growing interest in the fabrication and characterization of devices entirely within controlled environments, such as gloveboxes, to prevent the degradation of air-sensitive materials during processing[5–7]. The ability to transfer the as-fabricated devices directly from a glovebox to a vacuum chamber without exposing them to ambient air offers a powerful advantage for maintaining material stability and ensuring reliable measurements. This requirement has driven the development of compact and customizable vacuum chamber systems.

Several efforts have been made to address this challenge. For instance, an inexpensive, thermally stable vacuum chamber utilizing Peltier devices has enabled high-precision electrical transport measurements, achieving millikelvin-level temperature control[8]. Similarly, a high-vacuum system specifically designed for testing 2D optoelectronic devices has demonstrated versatility with temperature modulation and broad-wavelength compatibility[9]. Advances in miniaturized systems have included designs with integrated on-chip vacuum chambers and graphene-based sealing for enhanced performance[10]. These studies emphasize the potential of compact and affordable solutions, but they fail to address the unique requirements of glovebox integration for air-sensitive nanodevices. Recently, a very compact suitcase filled with inert gas was reported[11], it lacked electrical contacts for the in situ probing of air-sensitive devices.

Herein, we present a miniature vacuum chamber system designed to address this gap. Our system is sufficiently compact to fit within a glovebox, enabling the preparation and sealing of air-sensitive devices in an inert atmosphere before being transferred to vacuum conditions. It features a custom-built test board for three-terminal electrical-transport measurements tailored for field-effect transistors. Unlike existing solutions, our system is constructed primarily from commercially available contact-flange (CF) components, requires minimal modifications, and has a total cost of approximately €250. This design not only reduces the economic barrier for research groups, but also offers flexibility for testing a variety of nanodevices under controlled environments. The functionality of the system was demonstrated by characterizing a black phosphorus field-effect transistor fabricated and sealed under anaerobic conditions, ensuring no exposure to ambient air during the process.

## Methods

Figure 1 shows a schematic of the different chamber components. The inset shows a picture of the vacuum chamber system with and without the windows. The total system length is

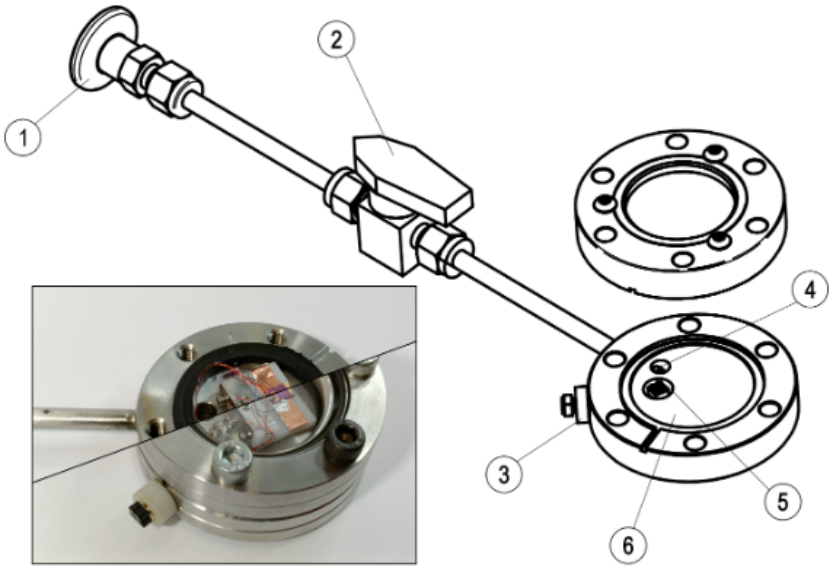


**Figure 1. Description of the miniature vacuum chamber system.** Diagram of the miniature vacuum chamber system highlighting the different parts: (1) KF25 flange to connect to the vacuum pump, (2) Swagelok compact vacuum valve, (3) homebuilt electrical feedthrough, (4) vacuum port, (5) cabling port and (6) vacuum base plate to place the device test boards. (inset) Composite optical image of the vacuum chamber without (left) and with (right) the optical window on.

approximately 30 cm, which makes it fit in the sample load lock of our anaerobic chamber[7]. The baseplate of the chamber was custom-modified in the mechanical workshop to include a homebuilt electrical feedthrough with four connections (suitable for the characterization of field-effect devices) and a port for vacuum pumping, which included a compact vacuum valve.

To fabricate the feedthrough, we started with a blank CF vacuum flange and drilled two aligned holes (one at the edge and one on the inner surface) so they met to form a continuous channel between the outside and inside of the chamber. Thin enamel-coated copper wires (magnetic wires) were threaded through this channel to create electrical paths. On the exterior (air side), the wires were soldered to a small PCB board fitted with pin sockets for convenient connection to the external instrumentation. The holes and wires were sealed using two-component epoxy resin (Nural 26) to maintain vacuum integrity. On the vacuum side, the wires were soldered to pin the sockets, allowing quick and tool-free connection/disconnection of the sample test board inside the chamber.

Figure 2a shows an optical image of the assembled test board mounted inside the vacuum chamber. The test board consisted of a machined polyoxymethylene (POM) base and an L-shaped stainless-steel top clamp (fabricated from a 0.5 mm thick 304 stainless steel sheet) held together with M1.6 screws. The compact footprint (20 mm × 24 mm, height ~10 mm) allows it to fit precisely into the recess machined into a vacuum flange. A copper strip was adhered to the base to enable contact with the back gate of the device via silver paint. The inset shows a schematic representation of the test board, highlighting the positioning of the cantilevered flexible contacts, springs, and screw mechanism.

Mounted on the L-shaped clamp is a small 2 mm × 4 mm plate trimmed from a standard PCB, to which two phosphor bronze, gold-coated cantilevered flexible contacts are soldered with a separation of 2.5 mm. These cantilevered contacts provided a gentle and tunable electrical connection with the device pads. The rounded ends were designed to avoid scratching the pads during contact. The cantilevered contacts and associated coil springs, which allow vertical flexibility, were repurposed using a commercial SD card connector. An electrical connection to the test board was made via pin headers, which were also mounted on the PCB.

Figure 2(b.1) and (b.2) show close-up optical images of the flexible cantilevered contacts at the lifted (non-contact) and lowered (contact) positions, respectively. The vertical displacement of the cantilevered contacts was controlled via a screw mechanism, allowing reliable and repeatable engagement with the device electrodes without requiring fine motor precision, which is particularly advantageous for handling inside a glovebox.

We designed our test board to be compatible with electrical pads separated by 2.54 mm (a standard electrode distance for devices fabricated by evaporation using shadow masks manufactured by Ossila); however, it could have been fabricated to be compatible with other electrode pad pitch distances. It also allows for optical characterization, owing to the length of the

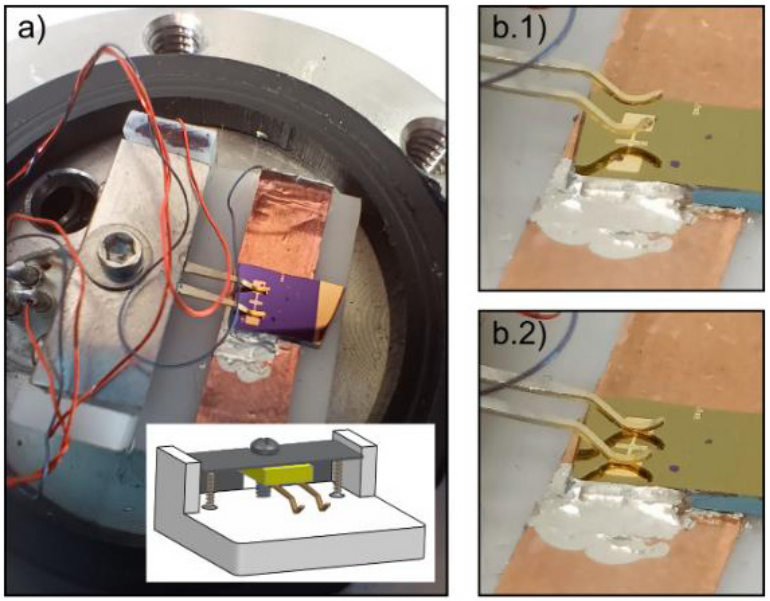


**Figure 2. Test board to make electrical connections to electronic devices inside the miniature chamber.** (**a**) Optical image of the homebuilt test board with flexible cantilevered contacts to make electrical connections to devices. The test board base is supplemented with a copper tape to make electrical connection to the back-gate of the samples for field effect measurements. (inset) 3D sketch of the test board. (**b.1**) and (**b.2**) Optical images of the flexible cantilevered contacts when lifted (**b.1**) and landed (**b.2**) onto the electrodes. The height of the flexible cantilevers can be controlled with the screw shown in (**a**).

cantilevered flexible contacts that make the sample fully accessible from the top viewport. The electrical connection to the back gate can be easily achieved through copper tape adhered to the base of the test board. Silver paint was used to connect the doped silicon substrate that was used as the back gate. This test board design facilitates electrical connection to devices, even when wearing thick gloves while operating inside a glovebox chamber. Once the flexible cantilevered contacts are lifted, the device is placed under the cantilevers, which are aligned with the pads of the chip below. The sample was then adhered to copper tape with silver paint to make a connection to the back-gate and to fix the sample and avoid movement while lowering the flexible pins with the screw.

### Materials and methods

***2D material exfoliation and transfer.*** BP flakes were mechanically exfoliated from bulk crystals (Smart Elements) using Nitto tape (Nitto SPV 224) onto a PDMS substrate (Gel-Film WF 4 × 6.0 mil by Gel-Pack). After flake selection and identification with an optical microscope in the transmission mode, the flakes were directly transferred from the PDMS to the final substrate between the prepatterned electrode pairs.

***Electrode preparation.*** Source–drain electrodes were fabricated by shadow mask evaporation (5 nm Ti/45 nm Au) onto a SiO2 (285 nm)/Si (p++) substrate. The Ossila and E321 shadow masks were used in this study.

***Electrical device characterization.*** In the electrical characterization of the device inside the miniature vacuum chamber, source–drain probing was achieved with a source-meter unit (Keithley 2450), while two programmable benchtop DC power supplies (Tenma 72–2715, connected in series) were used to apply gate voltages. Before acquiring the transport characteristics, the device was annealed on a hot plate (heating the miniature vacuum chamber) at 120 °C for 2 h.

## Results

To illustrate the potential of this small vacuum chamber, we fabricated a field-effect transistor with black phosphorus inside an anaerobic chamber and mounted the as-fabricated device inside the miniature vacuum chamber to completely avoid exposing the device to air. After device fabrication and loading into the miniature vacuum chamber, the chamber was sealed in an anaerobic atmosphere. The vacuum chamber was then placed outside the anaerobic chamber, and the chamber was pumped down to ~7 × $10^{-6}$ mbar (Figure 3). We then characterized the field-effect characteristics of the black phosphorus transistor.

Figure 4a shows the gate-dependent transport characteristics of the black phosphorus field effect FET immediately after device fabrication. As black phosphorus is a p-type semiconductor, the channel conductance decreases as the gate voltage is swept from negative to positive values. The inset depicts the transfer curve for the device, where saturation of the

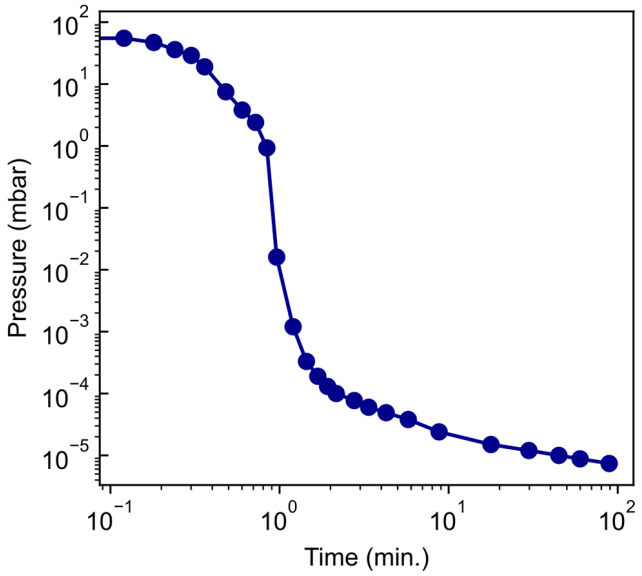


**Figure 3. Fast pump-down of miniature vacuum chamber.** Logging of the pressure in the vacuum chamber over 1.5 hours. Pressures below 1 × $10^{-5}$ mbar are achieved within 30 minutes.

source-drain current is not observed. After 15 d of storage in our custom miniature vacuum chamber (without further pumping), we repeated the electrical characterization of the device, as shown in Figure 4b. A moderate decrease (~50%) in device conductance was observed, both in the high- and low-conductance states, along with a 30 V shift in the transfer curve. This shift can be attributed to p-type doping induced by the adsorption of atmospheric species, such as oxygen, on the surface of the flake[12,13]. The observed degradation was likely due to the presence of residual gases inside the chamber, originating from the gradual outgassing of the internal surfaces. Because the materials and cleaning protocols of the chamber components were not fully optimized for ultrahigh vacuum performance, outgassing remains a plausible source of contamination over long storage times. This effect can be mitigated by implementing continuous pumping or by further optimizing the materials and preparation procedures to reduce the outgassing rates.

Notably, after 15 d, the ON/OFF ratio ($I_{ON}/I_{OFF}$) of the device remained nearly unchanged, only decreasing by 10%. These findings contrast with the well-documented degradation of non-encapsulated black phosphorus thin flakes, whose conductivity dramatically worsens in timescales of 1–2 days[14–16]. Overall, the transport characteristics of the black phosphorus transistor illustrate the environmental stability of air-sensitive materials in the vacuum chamber.

## Conclusions

The presented vacuum chamber system with electrical connections is an inexpensive and easy-to-implement solution for characterizing nanodevices under high-vacuum conditions.

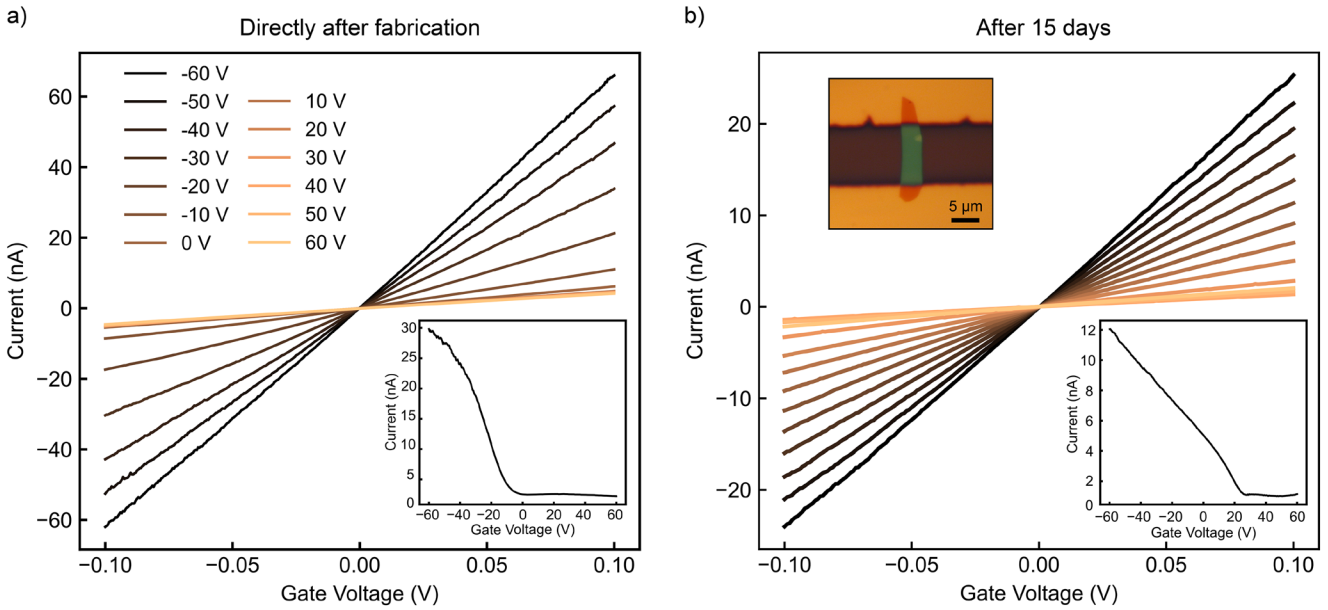


**Figure 4. Example of electrical transport measurement in a black phosphorus device inside the miniature chamber.** (**a**) Gate dependent source-drain current vs. bias voltage characteristics in a black phosphorus device fabricated inside an anaerobic chamber and directly loaded inside the miniature vacuum system inside the chamber. (Inset) Source-drain current vs. gate voltage curve under 50mV of bias voltage. (**b**) Same electrical transport as shown in (**a**) after 15 days in vacuum inside the miniature vacuum system. (Top inset) Optical image of two-terminal field-effect transistor based on non-encapsulated, few-layer black phosphorus.

The compatibility of the system with glovebox environments provides an added advantage for studying air-sensitive materials, such as organic perovskites[17,18] or high-temperature superconductors[19–21]. Our homebuilt sample test board makes it convenient to perform three-terminal electrical transport measurements and allows the study of the optoelectronic properties of field-effect transistors under focused illumination[22]. The performance of the system was demonstrated by characterizing a field-effect black phosphorus device prepared inside an anaerobic chamber and loaded into a vacuum chamber.

## Data availability statement

### Underlying data

Zenodo: Dataset for manuscript: Miniature vacuum chamber for electrical characterization of air-sensitive nanodevices, https://doi.org/10.5281/zenodo.15776802[23]

This project contains the following underlying data:

- Gate-dependent IV characteristics for black phosphorus field effect transistor
- Transfer curves for black phosphorus field effect transistor
- Pressure logging from miniature vacuum chamber pump-down

Data are available under the terms of the Creative Commons Attribution 4.0 International license (CC-BY 4.0).

### Extended data

Zenodo: Dataset for manuscript: Miniature vacuum chamber for electrical characterization of air-sensitive nanodevices, https://doi.org/10.5281/zenodo.15776802[23]

This project contains the following underlying data:

- Details of the miniature vacuum chamber (item list & technical drawings)
- Images of use of the miniature vacuum chamber in the anaerobic gloveless chamber
- Additional pressure-logging of the pump-down of the miniature vacuum chamber

Data are available under the terms of the Creative Commons Attribution 4.0 International license (CC-BY 4.0).

### Acknowledgments

*Text edition with AI language model:*
ChatGPT (GPT-4o, OpenAI's large-scale language-generation model) was used to improve the English grammar and writing style of this manuscript. The authors have reviewed, edited, and revised the ChatGPT-generated texts to their own liking and took ultimate responsibility for the content of this publication.

## References


1. Wang G, Pandey R, Karna SP: **Physics and chemistry of oxidation of two-dimensional nanomaterials by molecular oxygen.** *WIREs Comput Mol Sci.* 2017; **7**(1): e1280.
**Publisher Full Text**

2. Yang S, Jiang C, Wei S: **Gas sensing in 2D materials.** *Appl Phys Rev.* 2017; **4**(2): 021304.
**Publisher Full Text**

3. Zhao Q, Wang W, Carrascoso-Plana F, *et al.*: **The role of traps in the photocurrent generation mechanism in thin InSe photodetectors.** *Mater Horiz.* 2020; **7**(1): 252–262.
**Publisher Full Text**

4. Li J, Peng S, Jin Z, *et al.*: **The effect of a vacuum environment on the electrical properties of a MoS2 back-gate field effect transistor.** *Crystals.* 2023; **13**(10): 1501.
**Publisher Full Text**

5. Gray MJ, Kumar N, O'Connor R, *et al.*: **A cleanroom in a glovebox.** *Rev Sci Instrum.* 2020; **91**(7): 073909.
**PubMed Abstract** | **Publisher Full Text**

6. Wang W, Clark N, Hamer M, *et al.*: **Clean assembly of van der Waals heterostructures using silicon nitride membranes.** *Nat Electron.* 2023; **6**: 981–990.
**Publisher Full Text**

7. Gant P, Carrascoso F, Zhao Q, *et al.*: **A system for the deterministic transfer of 2D materials under inert environmental conditions.** *2D Mater.* 2020; **7**(2): 025034.
**Publisher Full Text**

8. Poole SF, Amin OJ, Solomon A, *et al.*: **Thermally stable Peltier controlled vacuum chamber for electrical transport measurements.** *Rev Sci Instrum.* 2024; **95**(3): 035108.
**PubMed Abstract** | **Publisher Full Text**

9. Zhao Q, Carrascoso F, Gant P, *et al.*: **A system to test 2D optoelectronic devices in high vacuum.** *J Phys Mater.* 2020; **3**(3): 036001.
**Publisher Full Text**

10. Yu P, Zhan F, Rao W, *et al.*: **An on-chip microscale vacuum chamber with high sealing performance using graphene as lateral feedthrough.** *Micromachines (Basel).* 2022; **14**(1): 84.
**PubMed Abstract** | **Publisher Full Text** | **Free Full Text**

11. Tirion S, Cheng Z, Pen C, *et al.*: **A technical note on a compact inert-gas suitcase for optical measurements of air-sensitive 2D materials**.
**Publisher Full Text**

12. Li XB, Guo P, Cao TF, *et al.*: **Structures, stabilities, and electronic properties of defects in monolayer Black Phosphorus.** *Sci Rep.* 2015; **5**: 10848.
**PubMed Abstract** | **Publisher Full Text** | **Free Full Text**

13. Lee BC, Kim CM, Jang HK, *et al.*: **Degradation pattern of Black Phosphorus multilayer field–effect transistors in ambient conditions: strategy for contact resistance engineering in BP transistors.** *Appl Surf Sci.* 2017; **419**: 637–641.
**Publisher Full Text**

14. Island JO, Steele GA, van der Zant HSJ, *et al.*: **Environmental instability of few-layer Black Phosphorus.** *2D Mater.* 2015; **2**(1): 011002.
**Publisher Full Text**

15. Wood JD, Wells SA, Jariwala D, *et al.*: **Effective passivation of exfoliated Black Phosphorus transistors against ambient degradation.** *Nano Lett.* 2014; **14**(12): 6964–6970.
**PubMed Abstract** | **Publisher Full Text**

16. Favron A, Gaufrès E, Fossard F, *et al.*: **Photooxidation and quantum confinement effects in exfoliated Black Phosphorus.** *Nat Mater.* 2015; **14**(8): 826–832.
**PubMed Abstract** | **Publisher Full Text**

17. Kojima A, Teshima K, Shirai Y, *et al.*: **Organometal halide perovskites as visible-light sensitizers for photovoltaic cells.** *J Am Chem Soc.* 2009; **131**(17): 6050–6051.
**PubMed Abstract** | **Publisher Full Text**

18. Schmidt-Mende L, Dyakonov V, Olthof S, *et al.*: **Roadmap on organic-inorganic hybrid perovskite semiconductors and devices.** *APL Mater.* 2021; **9**(10): 109202.
**Publisher Full Text**

19. Charaev I, Bandurin DA, Bollinger AT, *et al.*: **Single-photon detection using high-temperature superconductors.** *Nat Nanotechnol.* 2023; **18**(4): 343–349.
**PubMed Abstract** | **Publisher Full Text**

20. Merino RL, Seifert P, Retama JD, *et al.*: **Two-dimensional cuprate nanodetector with single telecom photon sensitivity at *T* = 20 K.** *2D Mater.* 2023; **10**(2): 021001.
**Publisher Full Text**

21. Ghosh S, Jangade DA, Deshmukh MM: **Nanowire bolometer using a 2D high-temperature superconductor.** *Nanotechnology.* 2023; **34**(1): 015304.
**PubMed Abstract** | **Publisher Full Text**

22. Pucher T, Bastante P, Xie Y, *et al.*: **Short-wave infrared photocurrent spectroscopy to probe narrow-gap 2D materials.** *J Phys Appl Phys.* 2025; **58**(18): 185102.
**Publisher Full Text**

23. Luque Merino R, Riquelme JJ, Castellanos-Gomez A: **Dataset for manuscript: miniature vacuum chamber for electrical characterization of air-sensitive nanodevices.** *Zenodo.* 2025; **10.5281**.

# Open Peer Review

## Current Peer Review Status: ? ?

**Version 1**

Reviewer Report 07 January 2026

https://doi.org/10.21956/openreseurope.22299.r67093

© **2026 Elahi E.** This is an open access peer review report distributed under the terms of the Creative Commons Attribution License, which permits unrestricted use, distribution, and reproduction in any medium, provided the original work is properly cited.

?

**Ehsan Elahi**
University of Chemistry and Technology, Prague, Czech Republic

Manuscript title: **Miniature vacuum chamber for electrical characterization of air-sensitive nanodevices**
The device/chamber concept is useful and clearly motivated (low-cost, glovebox-compatible vacuum probing), but the manuscript needs quantitative validation (vacuum + electrical contact performance), improved reproducibility detail, and tighter consistency in reporting. The core claims (high-vacuum capability, device preservation, and “reliable characterization”) are currently under-supported by data. However, major revision is required to strengthen the manuscript.
 Novelty is not clearly differentiated from prior compact/vacuum probing setups—add a direct comparison table and sharpen the unique contribution.
 Vacuum capability needs stronger validation—report pressure stability, pressure-rise/leak test, and repeatability across multiple pump-down cycles.
 Vacuum-incompatible materials (epoxy/plastics/tapes/paints) may outgas—justify choices and add cleaning/bake/best-practice guidance.
 Electrical probing reliability is not quantified—provide contact resistance/noise/drift metrics and alignment/force tolerance.
 Device results are under-supported—validate on multiple devices ($n \geq 3$) or narrow the claims to a proof-of-concept demonstration.
 Methods lack reproducibility detail—add a step-by-step glovebox →seal→pump→measure→store protocol with key timing/conditions.
 The presentation needs tightening—fix inconsistencies, improve figure labeling/dimensions, and ensure all references/data links are complete.

**Is the work clearly and accurately presented and does it cite the current literature?**
Partly

**Is the study design appropriate and does the work have academic merit?**
Yes

**Are sufficient details of methods and analysis provided to allow replication by others?**

Partly

**If applicable, is the statistical analysis and its interpretation appropriate?**
Partly

**Are all the source data underlying the results available to ensure full reproducibility?**
Yes

**Are the conclusions drawn adequately supported by the results?**
Yes

***Competing Interests:*** No competing interests were disclosed.

***Reviewer Expertise:*** Materials Science, Electronics, Nano-Materials

**I confirm that I have read this submission and believe that I have an appropriate level of expertise to confirm that it is of an acceptable scientific standard, however I have significant reservations, as outlined above.**

Reviewer Report 19 August 2025

https://doi.org/10.21956/openreseurope.22299.r57285

**© 2025 Mosquera-Vargas E.** This is an open access peer review report distributed under the terms of the Creative Commons Attribution License, which permits unrestricted use, distribution, and reproduction in any medium, provided the original work is properly cited.

?

**Edgar Mosquera-Vargas**
Universidad del Valle, Cali, Colombia

Manuscript title: **Miniature vacuum chamber for electrical characterization of air-sensitive nanodevices**
Review: Below is a comprehensive report on the article, including a summary of the work, strengths, criticisms and suggestions, as well as recommendations for authors:
1. Summary of the Article
This article presents the design, fabrication, and demonstration of a compact, inexpensive vacuum chamber system compatible with glovebox environments. The system enables the electrical characterization of air-sensitive nanodevices, specifically field-effect transistors (FETs), without exposing them to ambient air. The key contributions include:

1. a custom-built, glovebox-compatible vacuum chamber (~€250 total cost).
2. a flexible electrical feedthrough and test board design that supports three-terminal measurements.
3. a demonstration of functionality through the characterization of a black phosphorus FET fabricated and sealed in an anaerobic environment.

The device retained most of its electrical properties even after 15 days of vacuum storage, indicating strong performance of the chamber for short- to medium-term preservation of air-

sensitive devices.

2. Strengths

The article tackles a significant challenge in nanomaterial research: the lack of affordable and accessible vacuum systems compatible with glovebox environments. The proposed system provides practical utility, particularly for research groups with limited resources or access to costly commercial equipment. Importantly, the authors offer detailed descriptions of the design and fabrication process, enabling reproducibility. The use of a black phosphorus device serves as an excellent test case, demonstrating the chamber's effectiveness in preserving the integrity of air-sensitive materials. By leveraging commercially available CF components and modified off-the-shelf parts, the authors present a cost-effective, DIY solution with high functional value.

3. Major Criticisms (Must be addressed)

(i) Limited Quantitative Comparison with Existing Systems

- Issue: The article qualitatively references previous work but lacks quantitative benchmarking (e.g., vacuum levels, leakage rates, contact resistance, etc.).
- Action: Include a comparative table or discussion that summarizes how this system compares with previous works (Refs 8–11) in terms of cost, vacuum level, size, and key performance indicators (e.g., minimum leak rate, electrical noise).

(ii) Insufficient vacuum characterization

- Issue: The chamber is said to reach ~$7 \times 10^{-6}$ mbar, but there is no data on leak rate, base pressure stability, or outgassing rates.
- Action: Provide quantitative vacuum performance data, such as:
  - Pump-down curve (pressure vs. time)
  - Stability over several hours/days
  - Rate of pressure increase when isolated (leak test)
  - If unavailable, at least provide estimated outgassing rates of the materials used, or describe a method to assess it.

(iii) Limited scope of demonstration

- Issue: Only a single black phosphorus device was demonstrated, and results after 15 days show moderate degradation.
- Action: To strengthen the claim of versatility and performance:
  - Include results from another device type or material, or
  - Provide a repeatability test (i.e., multiple BP devices with similar results) to demonstrate consistency.
  - Alternatively, clearly state the limitations of the current demonstration and propose follow-up studies.

(iv). No Discussion of Electrical Contact Resistance or Noise

- Issue: No data is presented on the quality of electrical contacts, which is crucial for reproducibility.
- Action: Add a short discussion or table on:
  - Contact resistance values
  - Whether the flexible contact mechanism introduces variability
  - Suggestions for improving or tuning the mechanical-electrical interface (e.g., using spring-loaded pins or compliant materials)

4. Minor Issues and Suggestions

(i) Materials and Cleaning Protocols

- Issue: The paper mentions non-optimized materials and cleaning protocols.

- Suggestion: Add a section or appendix on recommended materials and cleaning procedures to reduce outgassing, especially for long-term storage.

(ii) PCB Contact Alignment Precision

- Issue: While the screw mechanism is elegant, it's unclear how precise and reproducible the pad alignment is.
- Suggestion: Briefly discuss:
  - Tolerance range for pad misalignment
  - Tips for users to ensure successful and damage-free placement inside the glovebox

(iii). Terminology and Consistency

- Issue: The manuscript inconsistently uses "vacuum chamber," "miniature vacuum chamber," "system," etc.
- Suggestion: Use a consistent term such as "miniature glovebox-compatible vacuum chamber (MGVC)" for clarity.

(iv). Figures

- Suggestion:
  - Include a dimensioned CAD drawing of the chamber layout and feedthroughs.
  - Improve figure labels for clarity (e.g., in Figure 2b, clearly distinguish between the "contact" and "non-contact" positions).
  - Provide a labeled photo of the system inside a glove box or load lock (if available).

5. Recommendations

To enhance the scientific impact and reliability of the article, the authors should:

1. Include quantitative benchmarking of vacuum performance and electrical stability over time.
2. Improve experimental robustness by showing repeatability or testing with additional materials/devices.
3. Add technical discussion about vacuum sealing, feedthrough optimization, and electrical contact quality.
4. Clarify limitations (e.g., long-term outgassing) and propose future improvements (e.g., continuous pumping or baking procedures).
5. Make the system more broadly accessible by including full fabrication files (e.g., PCB layout, flange modifications) as supplementary materials or in a public repository (e.g., GitHub).

Final Recommendation

The article presents a valuable and timely contribution to the field of nanomaterials and device engineering. However, several key technical aspects must be addressed before it can be considered scientifically robust and reproducible.

**Decision:** Major revision required.

With the suggested improvements, this work has the potential to become a widely cited reference for glovebox-compatible vacuum measurement systems in nanotechnology labs.

**Is the work clearly and accurately presented and does it cite the current literature?**

Partly

**Is the study design appropriate and does the work have academic merit?**

Yes

**Are sufficient details of methods and analysis provided to allow replication by others?**
Partly

**If applicable, is the statistical analysis and its interpretation appropriate?**
Not applicable

**Are all the source data underlying the results available to ensure full reproducibility?**
Partly

**Are the conclusions drawn adequately supported by the results?**
Partly

***Competing Interests:*** No competing interests were disclosed.

***Reviewer Expertise:*** Condensed Mater, Nanomaterials, Synthesis and Caharacterization.https://www.researchgate.net/profile/Edgar-Mosquera-Vargas

**I confirm that I have read this submission and believe that I have an appropriate level of expertise to confirm that it is of an acceptable scientific standard, however I have significant reservations, as outlined above.**